Table of Contents

Rotary Cutters

RCF2060 and RCF2072

30982

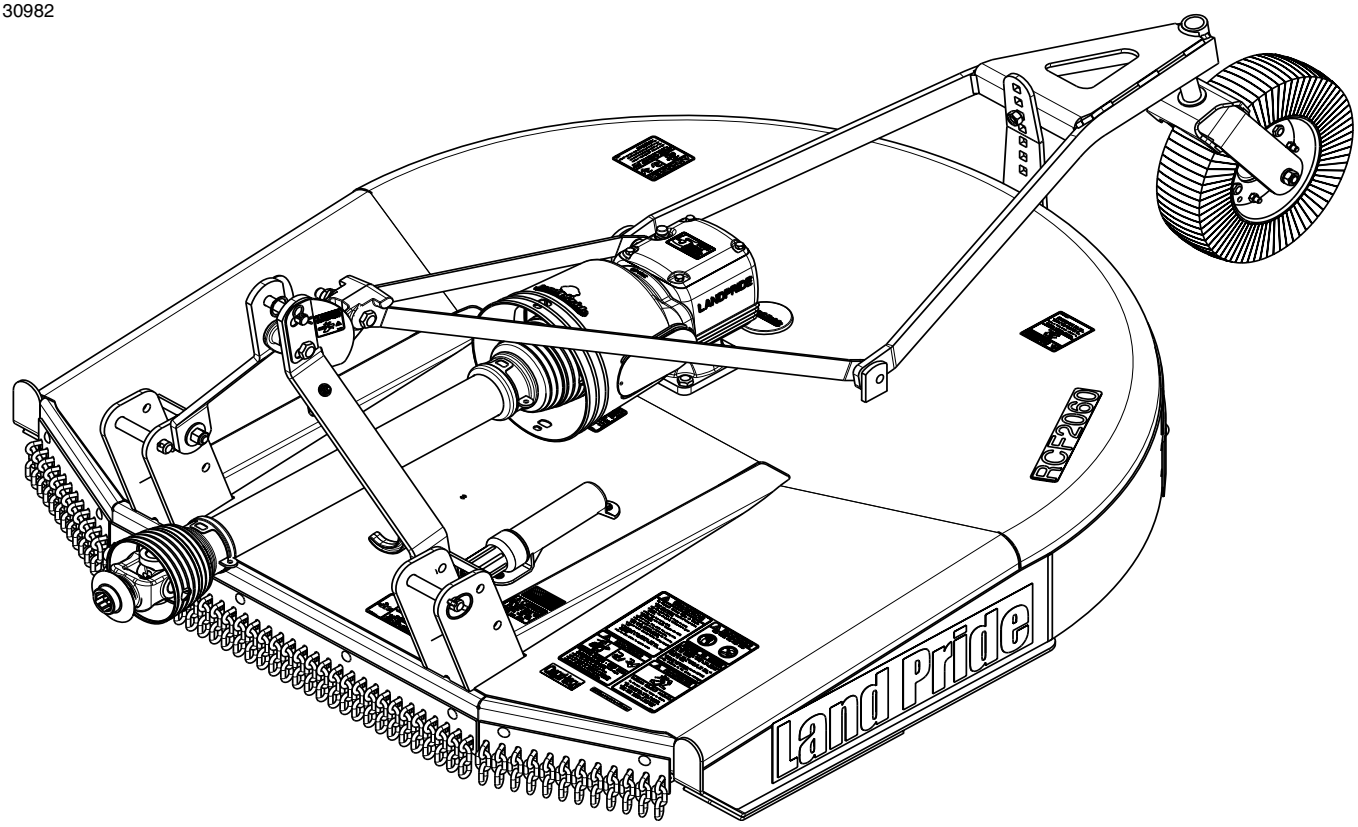

326-459M
Operator's Manual

Read the Operator's Manual entirely. When you see this symbol, the subsequent instructions and warnings are serious - follow without exception. Your life and the lives of others depend on it!

Cover photo may show optional equipment not supplied with standard unit.

For an Operator's Manual and Decal Kit in French Language, please see your Land Pride dealer.

Printed 4/15/26

Machine Identification

Record your machine details in the log below. If you replace this manual, be sure to transfer this information to the new manual.

If you, or the dealer, have added Options not originally ordered with the machine, or removed Options that were originally ordered, the weights and measurements are no longer accurate for your machine. Update the record by adding the machine weight and measurements provided in the Specifications & Capacities Section of this manual with the Option(s) weight and measurements.

Model Number	
Serial Number	
Machine Height	
Machine Length	
Machine Width	
Machine Weight	
Delivery Date	
First Operation	
Accessories	

Dealer Contact Information

Name: _____

Street: _____

City/State: _____

Telephone: _____

Email: _____

California Proposition 65

⚠WARNING: Handling passenger or off-highway motor vehicle parts can expose you to chemicals such as phthalates and lead, which can cause cancer and reproductive harm. To minimize exposure, service the vehicle in a well-ventilated area, wear gloves, and wash your hands. For more information see www.P65Warnings.ca.gov/motor-vehicle-parts.

Important Safety Information 1
Safety at All Times 1
Look for the Safety Alert Symbol 1
Be Aware of Signal Words 1
Be Aware of Special Notices 1
Safety Labels 6
Introduction 12
Application 12
Using This Manual 12
Terminology: 12
Owner Assistance 12
Serial Number 12
Further Assistance 12
Section 1: Assembly & Set-up 13
Tractor Requirements 13
Torque Requirements 13
Dealer Preparations 13
Uncrating Instructions 13
3-Point Hitch & Tailwheel Assembly 14
Driveline Installation 15
Gearbox Vented Dipstick 15
Tractor Shutdown Procedure 16
Tractor Hook-Up 16
Driveline Hook-Up 17
Check Driveline Collapsible Length 18
Check Driveline Maximum Length 19
Check Driveline Interference 19
Section 2: Accessory & Options Set-up 20
Replaceable Skid Shoes (Accessory) 20
Optional Front Guards 20
Front Single Chain Guard Assembly 20
Front Rubber Guard Assembly 20
Optional Rear Guards 21
Removal of Rear Metal Band Deflector 21
Rear Single Chain Guard 21
Rear Rubber Guard installation 21
Section 3: Adjustments 22
Deck Leveling & Cutting Height 22
Deck Leveling From Left to Right 22
Deck Cutting Height 22
Tailwheel Height Adjustment 23
Tractor Center 3-Point Adjustment 23
Section 4: Operating Instructions 24
Operating Checklist 24
Safety Information 24
Inspect Tractor & Cutter 25
Transporting 25
Blade Engagement & Disengagement 26
Blade Engagement 26
Blade Disengagement 26
Unhook Rotary Cutter 26
Field Operation 26
General Operating Instructions 27
Section 5: Maintenance & Lubrication 28
Maintenance 28
Cutter Blade Maintenance 28
Driveline Maintenance 30
Shear Bolt Protected Drivelines 30
Slip-Clutch Protected Drivelines 30
Slip-Clutch Run-In 30
Slip-Clutch Assembly / Disassembly 31
Disassembly 31
Accessory Skid Shoe Maintenance 32
Long-Term Storage 33
Ordering Replacement Parts 33
Lubrication Points 34
Gauge Wheel Spindle Tube 34
Gauge Wheel Hub 34
Gearbox 34
Driveline U-Joints 35
Driveline Shield Bearings 35
Driveline Profiles 35
Section 6: Specifications & Capacities 36
Section 7: Features & Benefits 38
Section 8: Troubleshooting 39
Section 9: Torque values Chart 40
Section 10: Warranty 41

Please take our Customer Satisfaction SURVEY at landpride.com

© Copyright 2026 All rights Reserved

Land Pride provides this publication "as is" without warranty of any kind, either expressed or implied. While every precaution has been taken in the preparation of this manual, Land Pride assumes no responsibility for errors or omissions. Neither is any liability assumed for damages resulting from the use of the information contained herein. Land Pride reserves the right to revise and improve its products as it sees fit. This publication describes the state of this product at the time of its publication, and may not reflect the product in the future.

Land Pride is a registered trademark.

All other brands and product names are trademarks or registered trademarks of their respective holders.

Printed in the United States of America.

See previous page for Table of Contents.

Parts Manual QR Locator

The QR (Quick Reference) code on the left will take you to the Parts Manual for this equipment. Download the appropriate app on your smart phone. Scan the QR code and take a picture.

Dealer QR Locator

The QR code on the left will link you to available dealers for Land Pride products. Refer to Parts Manual QR Locator on this page for detailed instructions.

Listed below are common practices that may or may not be applicable to the products described in this manual.

Safety at All Times

Careful operation is your best assurance against an accident.

All operators, no matter how much experience they may have, should carefully read this manual and other related manuals before operating the power machine and this implement.

- ▲ Thoroughly read and understand the "Safety Label" section. Read all instructions noted on them.
- ▲ Do not operate the equipment while under the influence of drugs or alcohol, as they impair your ability to safely and properly operate the equipment.
- ▲ The operator should be familiar with all functions of the tractor and attached implement, and be able to handle emergencies quickly.
- ▲ Make sure all guards and shields appropriate for the operation are in place and secured before operating the implement.
- ▲ Keep all bystanders away from equipment and work area.
- ▲ Start tractor from the driver's seat with hydraulic controls in neutral.
- ▲ Operate tractor and controls from the driver's seat only.
- ▲ Never dismount from a moving tractor or leave tractor unattended with engine running.
- ▲ Do not allow anyone to stand between the implement and tractor while backing up to the implement.
- ▲ Keep hands, feet, and clothing away from power-driven parts.
- ▲ While transporting and operating equipment, watch out for objects overhead and along the sides such as fences, trees, buildings, wires, etc.
- ▲ Do not turn tractor so tight as to cause hitched implement to ride up on the tractor's rear wheel.
- ▲ Store implement in a safe and secure area where children normally do not play. When needed, secure implement against falling with support blocks.



Look for the Safety Alert Symbol

The SAFETY ALERT SYMBOL indicates there is a potential hazard to personal safety and extra precaution must be taken. When you see this symbol, be alert and carefully read the message that follows it. Hazard control, and accident prevention are dependent upon the awareness, concern, prudence, and proper training of personnel involved in the operation, transport, maintenance, and storage of equipment.

Be Aware of Signal Words

A signal word designates a degree or level of hazard seriousness. They are:

DANGER: Indicates a hazardous situation that, if not avoided, will result in death or serious injury.

WARNING: Indicates a hazardous situation that, if not avoided, could result in death or serious injury.

CAUTION: Indicates a hazardous situation that, if not avoided, may result in minor or moderate injury.

Be Aware of Special Notices

Special notices are intended to point out important and helpful information that should be followed. They are usually placed inside a box. They are:

IMPORTANT: Indicates that equipment or property damage could result if instructions are not followed.

NOTE: Indicates supplementary explanations that will be helpful when using the equipment.

Safety Precautions for Children

Tragedy can occur if the operator is not alert to the presence of children, Children generally are attracted to implements and their work.

- ▲ Never assume children will remain where you last saw them.
- ▲ Keep children out of the work area and under the watchful eye of a responsible adult.
- ▲ Be alert and shut the implement and tractor down if children enter the work area.
- ▲ Never carry children on the tractor or implement. There is not a safe place for them to ride. They may fall off and be run over or interfere with the control of the power machine.
- ▲ Never allow children to operate the power machine, even under adult supervision.
- ▲ Never allow children to play on the power machine or implement.
- ▲ Use extra caution when backing up. Before the tractor starts to move, look down and behind to make sure the area is clear.

Tractor Shutdown & Storage

- ▲ If engaged, disengage power take-off.
- ▲ Park on solid, level ground and lower implement to ground or onto support blocks.
- ▲ Put tractor in park or set park brake.
- ▲ Turn off engine and remove ignition key to prevent unauthorized starting.
- ▲ Relieve all hydraulic pressure to auxiliary hydraulic lines.
- ▲ Wait for all components to stop before leaving operator's seat.
- ▲ Use steps, grab-handles and anti-slip surfaces when stepping on and off the tractor.

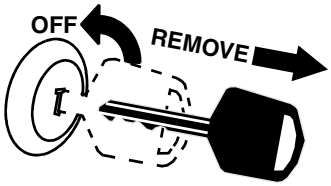

Listed below are common practices that may or may not be applicable to the products described in this manual.

Use A Safety Chain

- ▲ A safety chain will help control drawn machinery should it separate from the tractor drawbar.
- ▲ Use a chain with the strength rating equal to or greater than the gross weight of the towed implement.
- ▲ Attach the chain to the tractor drawbar support or other specified anchor location. Allow only enough slack in the chain to permit turning.
- ▲ Always hitch the implement to the machine towing it. Do not use the safety chain to tow the implement.

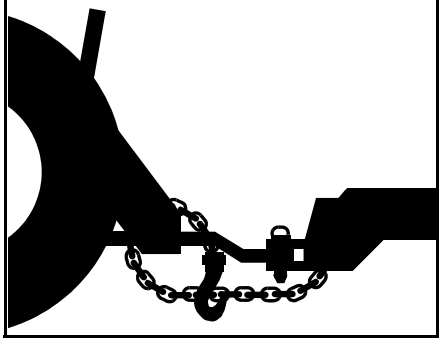

Towing Safely

- ▲ Comply with federal, state, and local laws.
- ▲ Use towing vehicle and trailer of adequate size and capacity. Secure equipment towed on a trailer with chocks, tie downs, and chains.
- ▲ **IMPORTANT:** Do not tow a load that is more than double the weight of the vehicle towing the load.
- ▲ Sudden braking can cause a towed trailer to swerve unexpectedly. Reduce speed if trailer is not equipped with brakes.



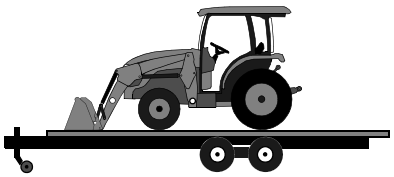

Transport Safely

- ▲ Comply with federal, state, and local laws.
- ▲ Avoid contact with any overhead utility lines or electrically charged conductors.
- ▲ Engage park brake when stopped on an incline.
- ▲ Maximum transport speed for an implement is 20 mph (32 km/h). DO NOT EXCEED.
- ▲ Never travel at a speed which does not allow adequate control of steering and stopping. Some rough terrains require a slower speed. Sudden braking can cause a towed load to swerve and upset.
- ▲ Do not tow an implement that, when fully loaded, weights more than 1.5 times the weight of towing vehicle.

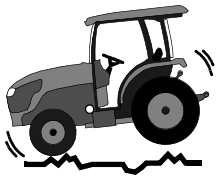

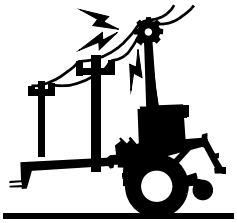

Tire Safety



- ▲ Tire changing can be dangerous and must be performed by trained personnel using the correct tools and equipment.
- ▲ Always properly match the wheel size to the properly sized tire.
- ▲ Always maintain correct tire pressure. Do not inflate tires above recommended pressures shown in the Operator's Manual.
- ▲ When inflating tires, use a clip-on chuck and extension hose long enough to allow you to stand to one side and NOT in front of or over the tire assembly. Use a safety cage if available.
- ▲ Securely support the implement when changing a wheel.
- ▲ When removing and installing wheels, use wheel handling equipment adequate for the weight involved.
- ▲ Make sure wheel bolts have been tightened to the specified torque.

Practice Safe Maintenance

- ▲ Understand procedure before doing work. Refer to the Operator's Manual for additional information.
- ▲ Work on a level surface in a clean, dry area that is well-lit.
- ▲ Lower implement to the ground and follow all shutdown procedures before leaving the operator's seat to perform maintenance.
- ▲ Do not work under any hydraulically supported equipment. It can settle, suddenly leak down, or be lowered accidentally. If it is necessary to work under the equipment, securely support it with stands or suitable blocking beforehand.
- ▲ Use properly grounded electrical outlets and tools.
- ▲ Use correct tools and equipment for the job that are in good condition.
- ▲ Allow equipment to cool before working on it.
- ▲ Disconnect battery ground cable (-) before servicing or adjusting electrical systems or before welding on implement.
- ▲ Inspect all parts. Make certain parts are in good condition & installed properly.
- ▲ Replace parts on this implement with genuine Land Pride parts only. Do not alter this implement in a way which will adversely affect its performance.
- ▲ Do not grease or oil implement while it is in operation.
- ▲ Remove buildup of grease, oil, or debris.
- ▲ Always make sure any material and waste products from the repair and maintenance of the implement are properly collected and disposed of.
- ▲ Remove all tools and unused parts from equipment before operation.
- ▲ Do not weld or torch on galvanized metal as it will release toxic fumes.









Listed below are common practices that may or may not be applicable to the products described in this manual.

Prepare for Emergencies

- ▲ Be prepared if a fire starts.
- ▲ Keep a first aid kit and fire extinguisher handy.
- ▲ Keep emergency numbers for doctor, ambulance, hospital, and fire department near the phone.

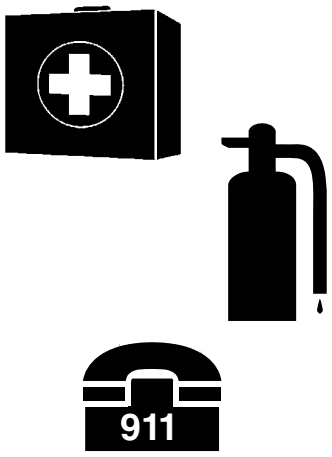

Wear Personal Protective Equipment (PPE)

- ▲ Wear protective clothing and equipment appropriate for the job such as safety shoes, safety, glasses, hard hat, dust mask, and ear plugs.
- ▲ Clothing should fit snug without fringes and pull strings to avoid entanglement with moving parts.
- ▲ Prolonged exposure to loud noise can cause hearing impairment or hearing loss. Wear suitable hearing protection such as earmuffs or earplugs.
- ▲ Operating a machine safely requires the operator's full attention. Avoid wearing headphones while operating equipment.



Avoid High Pressure Fluids



- ▲ Escaping fluid under pressure will penetrate the skin or eyes causing serious injury.
- ▲ Relieve all residual pressure before disconnecting hydraulic lines or performing work on the hydraulic system.
- ▲ Make sure all hydraulic fluid connections are properly tightened/torqued and all hydraulic hoses and lines are in good condition before applying pressure to the system.
- ▲ Use a piece of paper or cardboard, NOT BODY PARTS, to check for suspected leaks.
- ▲ Wear protective gloves and safety glasses or goggles when working with hydraulic systems.
- ▲ **DO NOT DELAY.** If an accident occurs, seek immediate emergency medical care or gangrene may result.

Use Safety Lights and Devices

- ▲ A slow moving power machine can create a hazard when driven on public roads. They are difficult to see, especially at night.
- ▲ Flashing warning lights and turn signals are recommended whenever driving on public roads.
- ▲ For tractors and other agriculture equipment, a Slow Moving Vehicle (SMV) sign is required when traveling on public roads.

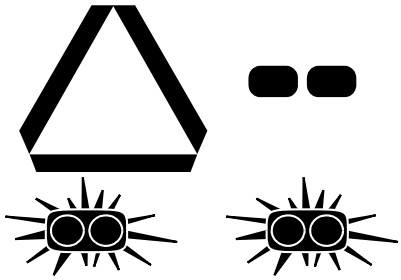

Use Seat Belt and ROPS

- ▲ Land Pride recommends the use of a CAB or roll-over-protective-structures (ROPS) and seat belt in almost all power machines. Combination of a CAB or ROPS and seat belt will reduce the risk of serious injury or death if the power machine should be upset.
- ▲ If ROPS is in the locked-up position, fasten seat belt snugly and securely to help protect the operator against serious injury or death from falling and/or machine overturn.



Keep Riders Off Machinery

- ▲ Never carry riders on the tractor or implement.
- ▲ Riders obstruct operator's view and interfere with the control of the power machine.
- ▲ Riders can be struck by objects or thrown from the equipment.
- ▲ Never use the tractor or implement to lift or transport riders.

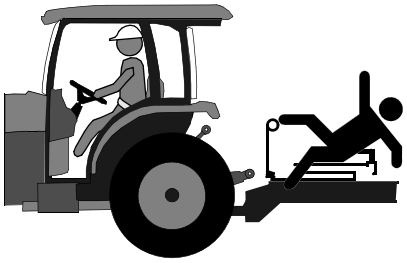

Listed below are common practices that may or may not be applicable to the products described in this manual.

Avoid Crystalline Silica (Quartz) Dust

Because crystalline silica is a basic component of sand and granite, many activities at construction sites produce dust containing crystalline silica. Trenching, sawing, and boring of material containing crystalline silica can produce dust containing crystalline silica particles. This dust can cause serious injury to the lungs (silicosis).

There are guidelines which should be followed if crystalline silica (quartz) is present in the dust.

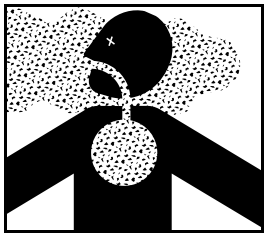

- ▲ Be aware of and follow OSHA (or other local, State, or Federal) guidelines for exposure to airborne crystalline silica.
- ▲ Know the work operations where exposure to crystalline silica may occur.
- ▲ Participate in air monitoring or training programs offered by the employer.
- ▲ Be aware of and use optional equipment controls such as water sprays, local exhaust ventilation, and enclosed cabs with positive pressure air conditioning if the machine has such equipment. Otherwise respirators shall be worn.
- ▲ Where respirators are required, wear a respirator approved for protection against crystalline silica containing dust. Do not alter respirator in any way. Workers who use tight-fitting respirators can not have beards/ mustaches which interfere with the respirator seal to the face.
- ▲ If possible, change into disposable or washable work clothes at the work site; shower and change into clean clothing before leaving the work site.
- ▲ Do not eat, drink, use tobacco products, or apply cosmetics in areas where there is dust containing crystalline silica.
- ▲ Store food, drink, and personal belongings away from the work area.
- ▲ Wash hands and face before eating, drinking, smoking, or applying cosmetics after leaving the exposure area.

Handle Chemicals Properly

- ▲ Protective clothing should be worn.
- ▲ Handle all chemicals with care.
- ▲ Follow instructions on container label.
- ▲ Agricultural chemicals can be dangerous. Improper use can seriously injure persons, animals, plants, soil, and property.
- ▲ Inhaling smoke from any type of chemical fire can be a serious health hazard.
- ▲ Store or dispose of unused chemicals as specified by the chemical manufacturer.



Dig Safe - Avoid Underground Utilities

- ▲ USA: Call 811
  CAN:
  http://www.clickbeforeyoudig.com
- ▲ Always contact your local utility companies (electrical, telephone, gas, water, sewer, and others) before digging so that they may mark the location of any underground services in the area.
- ▲ Be sure to ask how close you can work to the marks they positioned.



This page left blank intentionally.

Safety Labels

Your Rotary Cutter comes equipped with all safety labels in place. They were designed to help you safely operate your implement. Read and follow their directions.

1. *Keep all safety labels clean and legible.*
2. *Refer to this section for proper label placement. Replace all damaged or missing labels. Order new labels from your nearest Land Pride dealer. To find your nearest dealer, visit our dealer locator at www.landpride.com.*
3. *Some new equipment installed during repair requires safety labels to be affixed to the replaced component as specified by Land Pride. When ordering new components make sure the correct safety labels are included in the request.*
4. *Refer to this section for proper label placement.*
   To install new labels:
   a. *Clean surface area where label is to be placed.*
   b. *Spray soapy water onto the cleaned area.*
   c. *Peel backing from label and press label firmly onto the surface.*
   d. *Squeeze out air bubbles with edge of a credit card or a similar type of straight edge.*

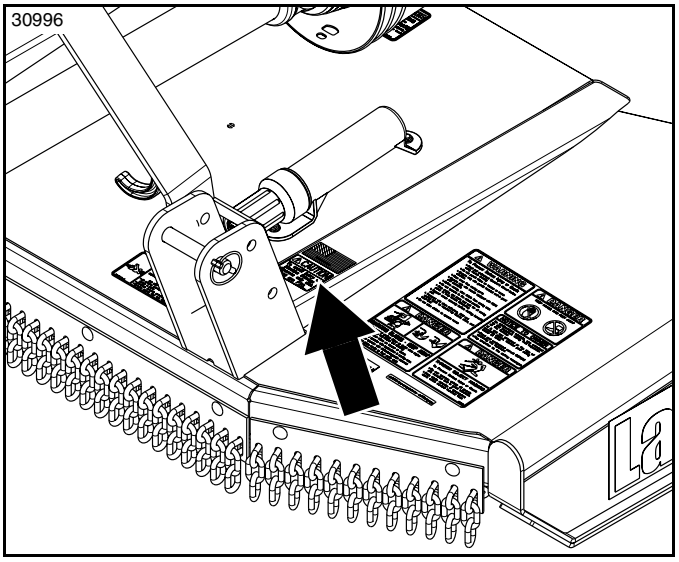



818-130C

Warning: Operate with 540 rpm Power Take-off Speed

1 Place: Behind front left 3-point clevis plates

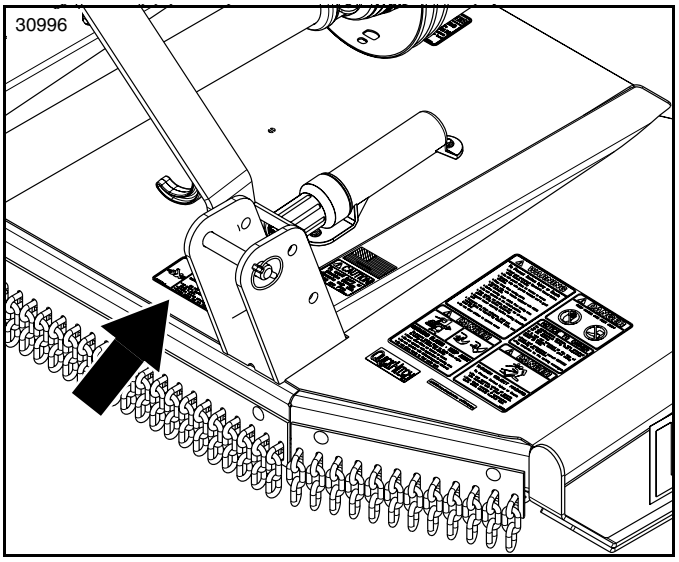



818-142C

Danger: Rotating Driveline Entanglement Hazard

1 Place: At the front of the deck

70376



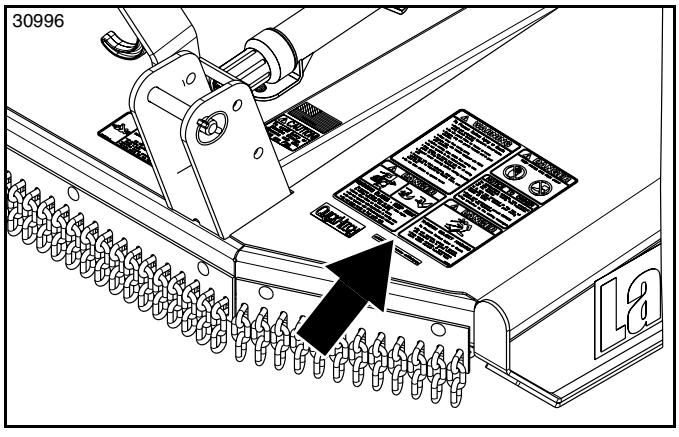

844-190C

Danger/Warning Safety Combo: List of Safety Hazards

1 Place:

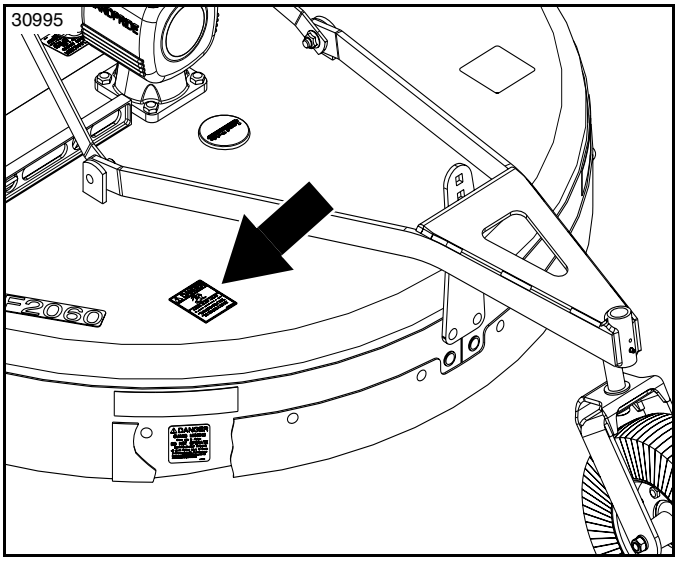

70376



818-556C

Danger: Thrown Object Hazard

1 Place: On the back left side of the cutter deck

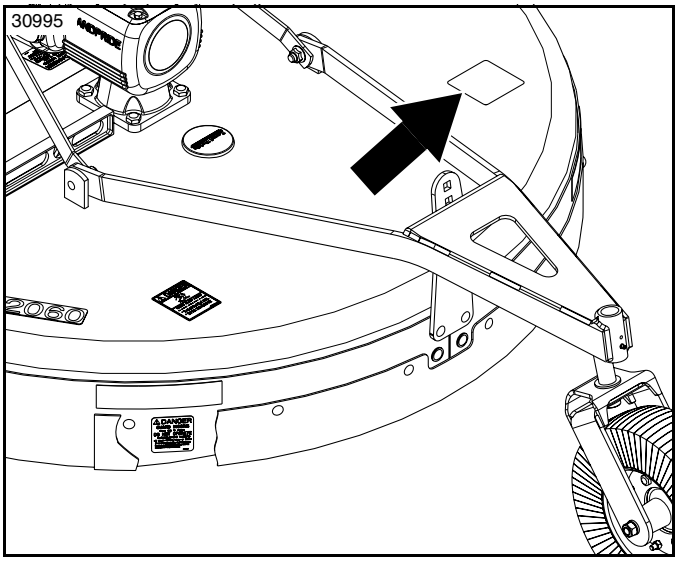

70266



818-555C

Danger: Rotating Blade Hazard

1 Place: On the back right side of the cutter deck

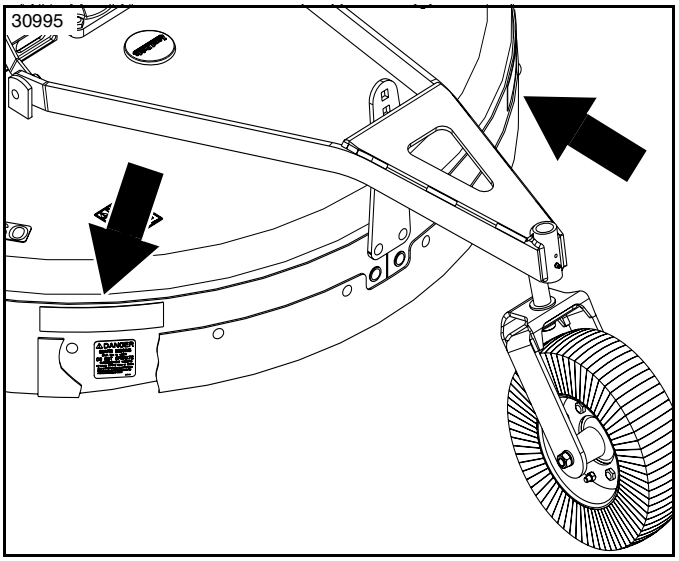



838-614C

Red Reflector: 2" x 9"

2 Places: Rear left side and rear right side of deck

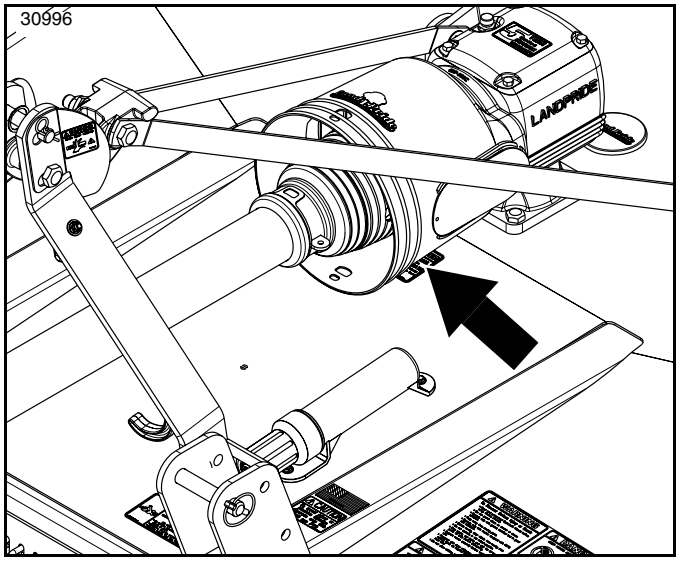

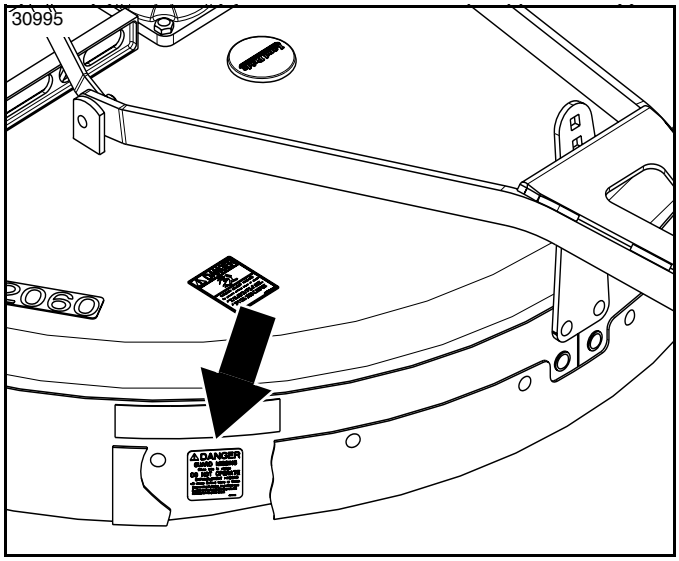

70358



818-543C

Danger: Guard Missing Hazard - Do not Operate

2 Places: Beneath the gearbox/driveline shield, and beneath the rear guard

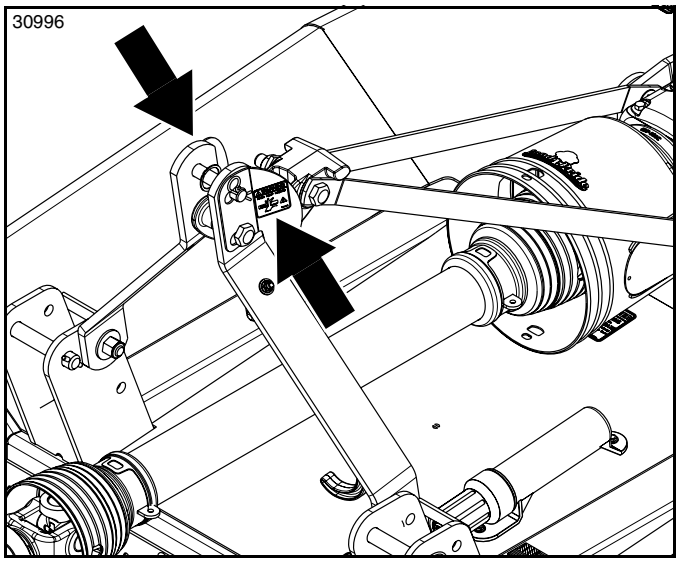

70247



858-148C

Warning: Pinch Point Hazard

2 Places: Located both sides of the floating hitch

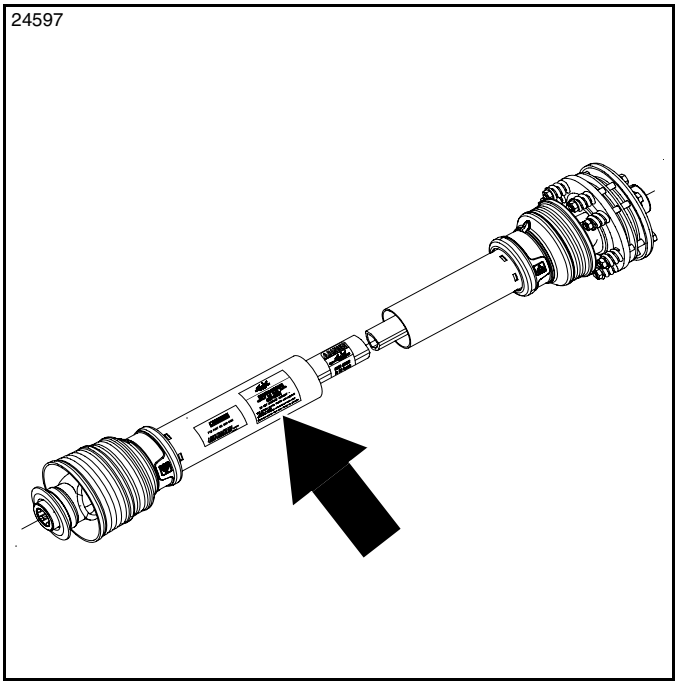

70375



818-552C
Danger: Rotating Driveline - Keep Away
1 Place: On the driveline shield

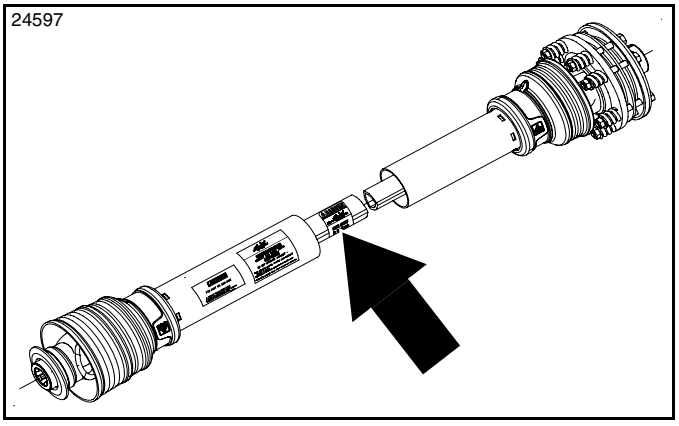

70374



818-540C
Danger: Guard Missing - DO NOT Operate
1 Place: On the driveline inner profile

This page left blank intentionally.

Land Pride welcomes you to the growing family of new product owners. This Rotary Cutter has been designed with care and built by skilled workers using quality materials. Proper assembly, maintenance, and safe operating practices will help you get years of satisfactory use from this machine.

Application

Land Pride's RCF20 Series Rotary Cutters are built and designed by Land Pride for cutting on gentle slopes or slightly contoured right-of-ways, pastures, around the farm, or around town. The cutting widths, 60" (152 cm) for RCF2060 and 72" (183 cm) for RCF2072, are compatible with the more maneuverable 20 to 65 hp (15 to 49 kW) tractors with 540 rpm power take-off speed. These cutters have a Category 1 3-point hitch that is Quick Hitch adaptable. The standard ASAE Category III driveline is offered with either shear bolt or slip-clutch protection and the tailwheel is offered laminated or solid rubber.

RCF20 Series cutters cut through grass, weeds, and light brush up to 2" (5 cm) in diameter and have a cutting height range of 1-1/ 2" to 12" (4 to 30.5 cm) with a blade tip speed of 16, 363 fpm (83.1 mps). The RCF1872 has a cutting height range of 1-1/2" to 11-1/2" (4 to 29 cm) with a blade tip speed of 14, 955 fpm (76 mps).

These units come with a 24" (61 cm) diameter standard-duty stump jumpers and welded on full length skid shoes. A metal band shield is standard equipment for the rear. Optional shields for the front and rear are rubber deflectors and chain guards.

See **"Specifications & Capacities"** on page 36 and **"Features & Benefits"** on page 38 for additional information and performance enhancing options.

Using This Manual

- This Operator's Manual is designed to help familiarize the operator with safety, assembly, operation, adjustments, troubleshooting, and maintenance. Read this manual and follow the recommendations to help ensure safe and efficient operation.
- The information contained within this manual was current at the time of printing. Some parts may change slightly to assure you of the best performance.
- To order a new Operator's or Parts Manual, contact your authorized dealer. Manuals can also be downloaded, free-of-charge, from our website at www.landpride.com.

Terminology:

"Right" or "Left" as used in this manual is determined by the direction the operator faces while sitting in the operator's seat looking forward unless otherwise stated.

Owner Assistance

The dealer should complete the Online Warranty Registration at the time of purchase. This information is necessary to provide you with quality customer service.

The parts on your Rotary Cutter have been specially designed by Land Pride and should only be replaced with genuine Land Pride parts. Contact a Land Pride dealer if customer service or repair parts are required. Your Land Pride dealer has trained personnel, repair parts, and equipment needed to service the implement.

Serial Number

For quick reference and prompt service, record model and serial number on the inside cover page and again on the warranty page. Always provide model number and serial number when ordering parts and in all correspondence with your Land Pride dealer. For location of your serial number plate, see Figure 1.

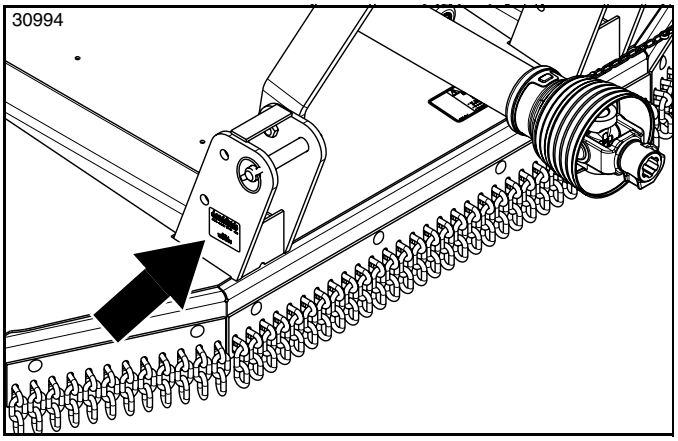

Figure 1

Further Assistance

Your dealer wants you to be satisfied with your new Rotary Cutter. If for any reason you do not understand any part of this manual or are not satisfied with the service received, the following actions are suggested:

1. Discuss any problems you have with your implement with your dealership service personnel so they can address the problem.
2. If you are still not satisfied, seek out the owner or general manager of the dealership, explain the question/problem, and request assistance.
3. For further assistance write to:

Land Pride Service Department
1525 East North Street
P.O. Box 5060
Salina, Ks. 67402-5060

E-mail address
lpservice@landpride.com

Tractor Requirements

Tractor horsepower and hitch category should be within the range noted below. Tractors outside the horsepower range must not be used.

Tractor Horsepower Rating . . . . . 20-65 hp (15-49 kW)
Hitch Category . . . . . Cat I
Power Take-Off Speed . . . . . 540 rpm
Power Take-Off Shaft Type . . . . . 1 3/8"-6 Spline

WARNING

To avoid serious injury or death:

Lightweight tractors with rear attached implements may need weights added to the front to maintain steering control. Consult your tractor Operator's Manual to determine weight requirements and maximum limitations.

Torque Requirements

Refer to **"Torque Values Chart"** on page 40 to determine correct torque values for common bolts. See **"Additional Torque Values"** at bottom of chart for exceptions to standard torque values.

Dealer Preparations

WARNING

To avoid serious injury or death:

Always secure cutter with an overhead crane, fork lift, or other suitable lifting device before removing hardware bags, shipping components, bands, lag screws, or hitch pins. The cutter can suddenly fall.

This Rotary Cutter has been partially assembled at the factory. However, some assembly will be necessary to attach the hitch, driveline, and guards to the cutter.

It is best to go through the **"Pre-Assembly Checklist"** on this page before assembling the cutter. Speed up your assembly task and make the job safer by having all the needed parts and equipment readily at hand.

Uncrating Instructions

WARNING

To avoid serious injury or death:

Always secure cutter with an overhead crane, fork lift, or other suitable lifting device before removing hardware bags, shipping components, bands, lag screws, or hitch pins. The cutter can suddenly fall.

1. Secure cutter with a hoist or other lifting device before removing shipping hardware.
2. Cut shipping straps securing driveline and hitch straps (#5) to the shipping crate. Remove driveline from shipping crate and lay gently hitch straps down onto the shipping crate.

Pre-Assembly Checklist

✔	Check	Page
☐	Have a forklift or hoist with properly sized chains and safety stands capable of lifting and supporting the equipment on hand.	
☐	Have a minimum of 2 people on hand while assembling.	
☐	Make sure all major components and loose parts are shipped with the machine. Refer to this manual if unsure.	
☐	Make sure working parts move freely, bolts are tight and cotter pins are spread. Refer to this Operator's Manual.	
☐	Double check to make sure all fasteners and pins are installed correctly. Use Parts Manual 3126-459P if unsure. Refer to "Using This Manual" on page 12 for instructions on how to order or download a Parts Manual. **NOTE:** Small hardware shipped loose from the factory is contained in a bag. Larger parts are attached to the shipping crate. All factory assembled hardware should be installed in their correct location. Remember their location if removed. Keep removed parts separated.	
☐	Make sure all safety labels are legible and correctly located. Reflectors must be visible when machine is in transport position. Replace all missing / damaged labels and reflectors.	Page 6
☐	Make sure all grease fittings are in place and lubricated. Refer to Lubrication Points.	Page 34
☐	Check fluid level in all gearboxes. Refer to the Maintenance and Lubrication section.	Page 34
☐	Lubricate all drivelines joints and profiles. Refer to Lubrication Points.	Page 35

3. **5-pack only:** Remove bar at the top connecting this cutter to other cutters. Be sure to replace the bolts in the cutter and to tighten it to the correct torque.
4. Remove lag screws securing front face of cutter to the crate.
5. Using lifting device, remove tension on hitch pins securing clevis plates to shipping crate.
6. Remove hitch pins from clevis plates and lift cutter from shipping crate.

NOTE: When lowering cutter onto the working area, keep hitch straps (#5) from falling onto the manual tube and breaking the tube.

7. Gently lower cutter onto the working area. Be careful not to allow hitch straps (#5) to fall onto the plastic manual tube.

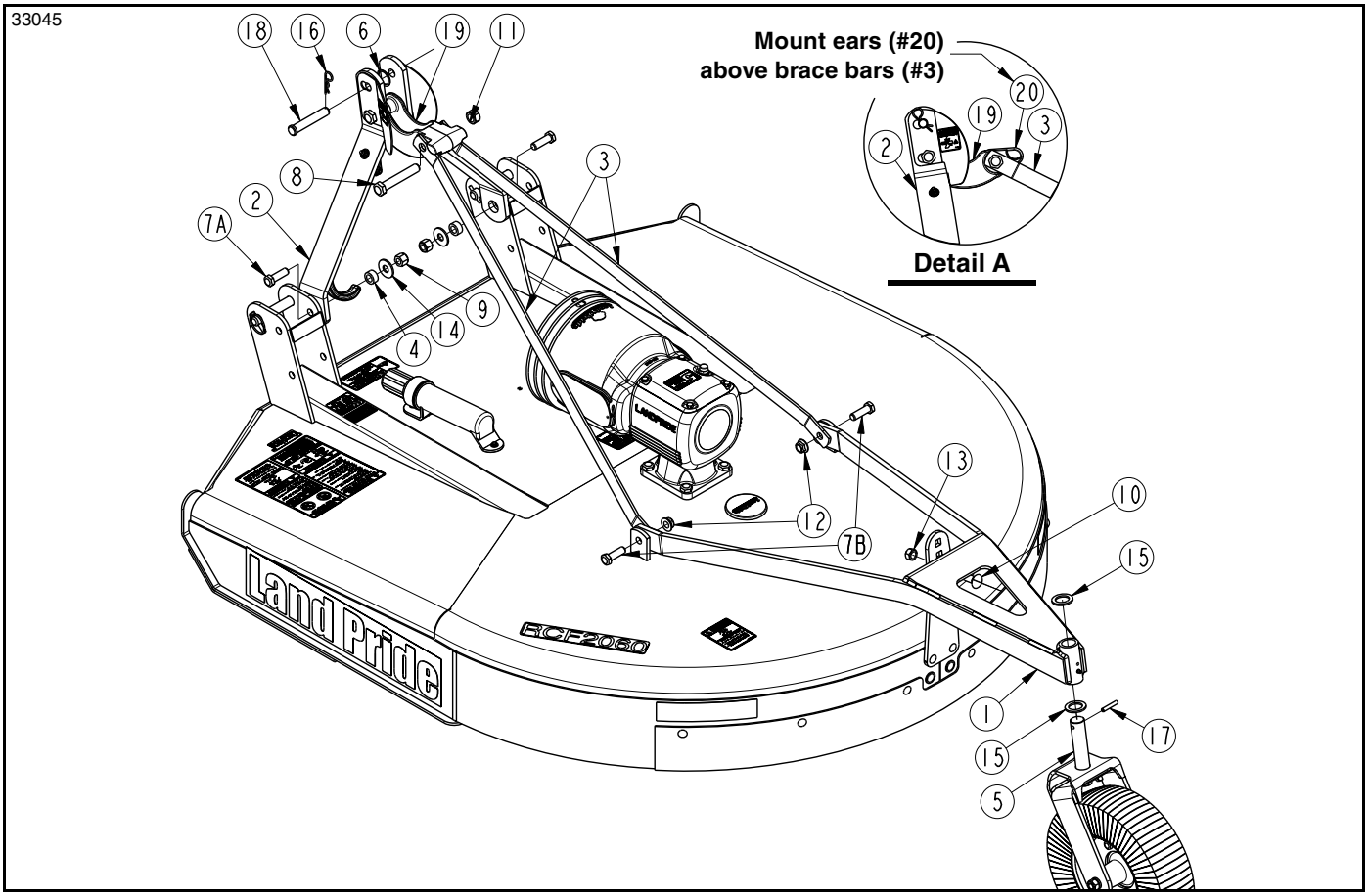

Hitch Assembly
Figure 1-1

3-Point Hitch & Tailwheel Assembly

Refer to Figure 1-1 on page 14:

1. Bushings (#4) are zip tied to top hitch (#19).
2. Snap ring (#6) is shipped stored on clevis pin (#18). Remove hairpin cotter (#16), clevis pin (#18), and snap ring (#6).
3. Reattach clevis pin (#18) to A-frames (#2) with hairpin cotter (#16). Keep snap ring (#6) for driveline assembly.
4. Remove flat washers (#14) and nylock nuts (#9) from bolts (#7A).
5. Reattach A-frames (#2) with 5/8"-11 x 2" GR5 bolts (#7A), bushings (#4), flat washers (#14), and nylock nuts (#9). Tighten nylock nuts (#9).
6. Unbolt short crossbar of tailwheel A-frame (#1) from adjusting bracket.
7. Attach A-frame (#1) and 11/16" (7.5 mm) diameter holes in rear brace bars (#3) to the rear deck lugs as shown using 5/8"-11 x 2" GR5 bolts (#7B) and hex flange locknuts (#12). Draw locknuts up snug and then back off 1/4 turn.
8. Attach tailwheel A-frame (#1) to adjusting bracket with 5/8"-11 x 1 1/2" carriage bolt (#10) and 5/8" top locknut (#13). Tighten locknut to the correct torque.

IMPORTANT: See Detail A in Figure 1-1. Floating top hitch (#19) must be installed with ears (#20) above rear brace bars (#3).

9. Rotate A-frame/floating top hitch (#2 & #19) up and rotate left rear brace (#3) up until holes in rear braces (#3) align with hole in floating top hitch (#19).
10. Insert 3/4"-10 x 4 1/2" GR5 bolt (#8) into the left rear brace (#3), floating top hitch (#19), and right rear brace (#3).
11. Secure bolt (#8) with hex flange locknut (#11). Draw locknut (#11) up snug and then back off 1/4 turn.
12. Install one machine washer (#15) on pivot shaft of tailwheel (#5).
13. Insert tailwheel pivot shaft (#5) into tailwheel A-frame (#1).
14. Install second machine washer (#15) on pivot shaft of tailwheel (#5) and secure with roll pin (#17).

NOTE: After assembly of hitch and tailwheel, push on top of A-frame assembly (#2). It should rotate backward and floating top link (#19) should rotate upward. If they are too stiff to rotate, loosen nuts (#11) until they will rotate freely.

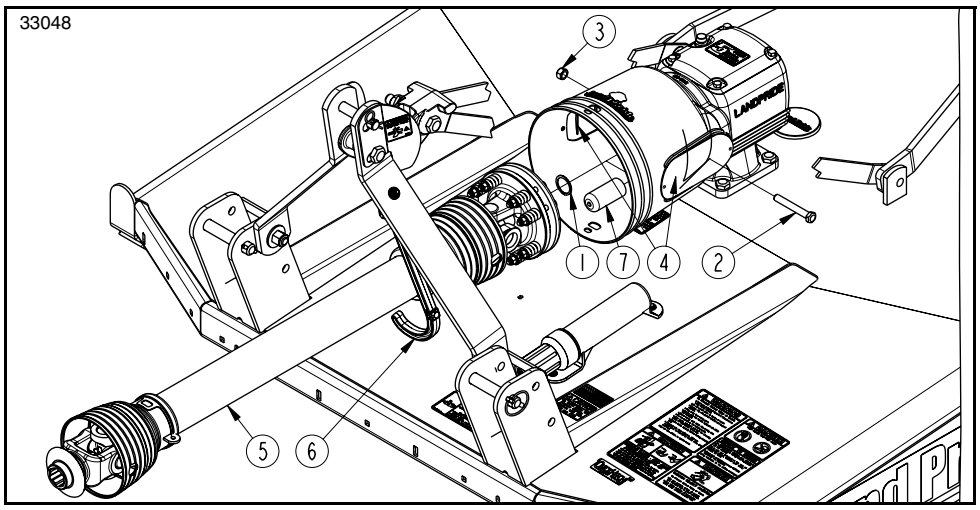

Driveline Installation
Figure 1-2

Driveline Installation

IMPORTANT: The driveline must be lubricated before putting it into service. Refer to **"Lubrication Points"** on page 34.

Refer to Figure 1-2:

1. Remove rubber protective sleeve (#7) from gearbox input shaft and discard.
2. Unsnap side access covers (#4) from both sides of the gearbox shield. Save covers for reuse.
3. Remove bolt (#2) from end of driveline (#5).
4. Slide driveline (#5) onto gearbox input shaft until holes in driveline yoke align with hole in gearbox input shaft.
5. Insert bolt (#2) through driveline yoke and gearbox input shaft.

NOTE: It may be necessary to use shallow sockets or swivel sockets and socket extensions to secure bolt (#2) while tightening nut (#3).

6. Secure bolt with a new nylock nut (#3) or with a new hex nut and jam nut (not shown).
   - If bolt (#3) is a shear bolt, draw nylock nut up snug. If using a hex nut and jam nut, draw hex nut up snug and tighten jam nut to the correct torque.
   - If driveline has a slip clutch, tighten nylock nut or hex nut and jam nut to the correct torque.
7. Skip to step #8 if installing a slip clutch driveline.

NOTE: Snap ring (#1) is for extra security should driveline shear bolt (#2) break. Do not use snap ring with a slip clutch driveline.

8. If driveline (#5) has a shear bolt instead of a slip clutch, install snap ring (#1) onto the gearbox input shaft groove. Discard snap ring if driveline has a slip clutch.
9. Reinstall access covers (#4).
10. Raise driveline (#5) up and rotate driveline hook (#6) down.
11. Lower driveline (#5) until resting in driveline hook (#6).

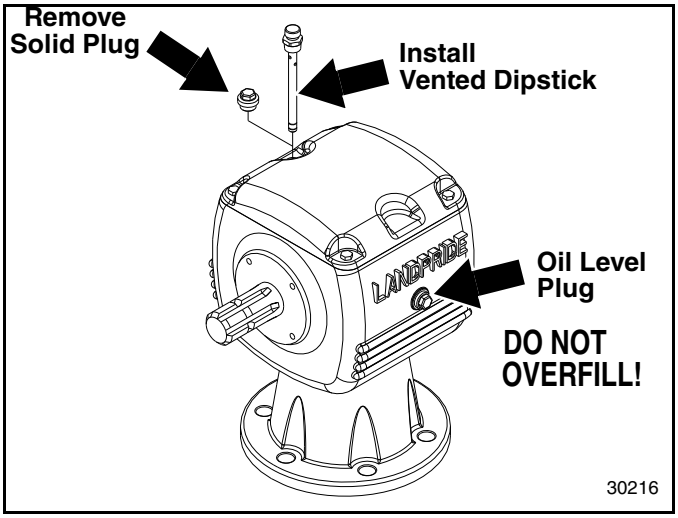

Vented Dipstick Installation
Figure 1-3

Gearbox Vented Dipstick

Refer to Figure 1-3:

IMPORTANT: Gearboxes are shipped with solid plugs in them to prevent oil loss during shipping and handling. The solid plug on top of the gearbox must be replaced with a vented dipstick before operating the implement.

A vented dipstick is shipped loose and packaged with the Operator's Manual. Remove temporary solid plug from top of gearbox and replace with vented dipstick. See your nearest Land Pride dealer if dipstick is missing.

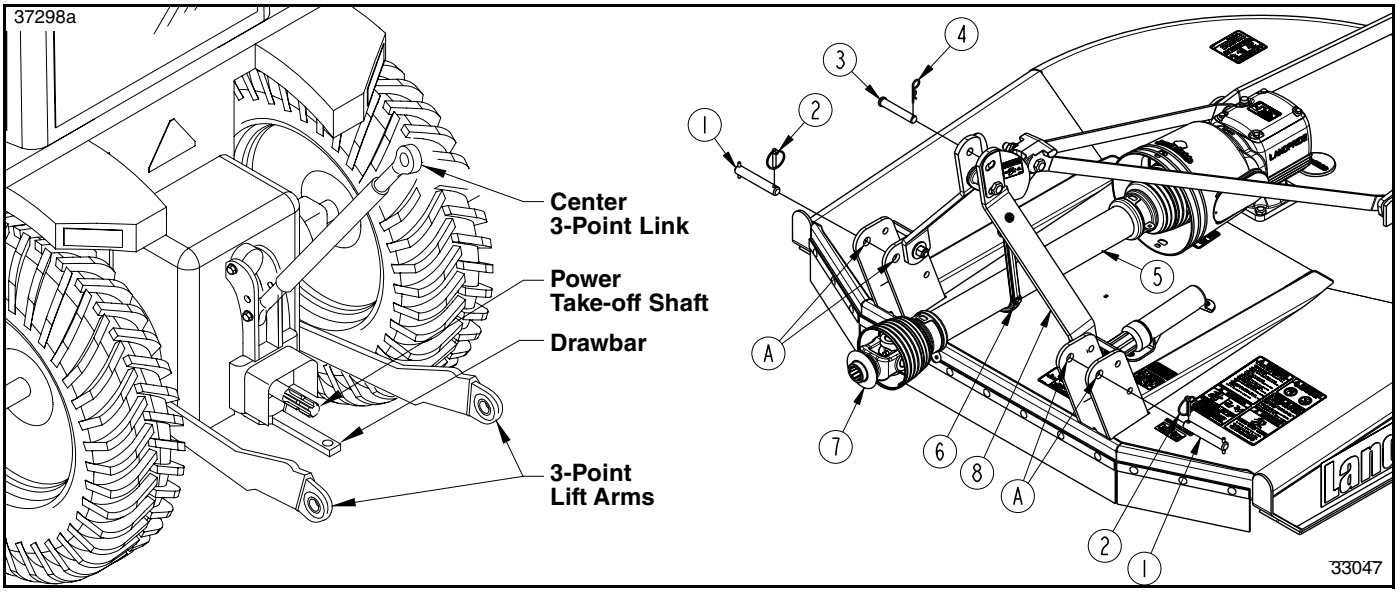

Tractor Hook-Up
Figure 1-4

Tractor Shutdown Procedure

The following are basic tractor shutdown procedures. Follow these procedures and any additional shutdown procedures provided in your tractor Operator's Manual before leaving the operator's seat.

1. Reduce engine speed and disengage power take-off if engaged.
2. Park tractor and implement on level, solid ground.
3. Lower implement to ground or onto non-concrete support blocks.
4. Put tractor in park or set park brake, turn off engine, and remove ignition key to prevent unauthorized starting.
5. Relieve all hydraulic pressure to auxiliary hydraulic lines.
6. Wait for all components to come to a complete stop before leaving the operator's seat.
7. Use steps, grab-handles and anti-slip surfaces when stepping on and off the tractor.

Tractor Hook-Up

Refer to Figure 1-4:

DANGER

To avoid serious injury or death:

A crushing hazard exists while connecting and disconnecting the implement. Keep people and animals away while backing-up to the implement or pulling away from the implement. Do not operate hydraulic controls while a person or animal is directly behind the power machine or near the implement.

WARNING

To avoid serious injury or death:

Lightweight tractors with rear attached implements may need weights added to the front to maintain steering control. Consult your tractor Operator's Manual to determine weight requirements and maximum limitations.

NOTE: Land Pride's Quick Hitch can be attached to the tractor to provide quick and easy 3-point hook-up and detachment. See your nearest Land Pride dealer to purchase a Quick-Hitch.

A 3-point Category I or II hitch is required. The lower 3-point arms of the 3-point hitch must be stabilized to prevent side-to-side movement. Most tractors have sway blocks or adjustable chains for this purpose.

1. Locate cutter on a flat level surface.
2. Slowly back tractor up to the Rotary Cutter while using the tractor's 3-point hydraulic control to align lower 3-point arm holes with hitch pin holes "A".
3. Engage tractor park brake, shut tractor engine off, and remove key before dismounting from tractor.
4. Attach lower lift arms to clevises with hitch pins (#1) and secure with linchpins (#2).
5. Connect top center 3-point link to upper hitch with clevis pin (#3) and hairpin cotter (#4).
6. Return to tractor and slowly raise and lower cutter carefully to ensure that the drawbar, tires, and other equipment on the tractor do make contact with cutter frame. Move or remove drawbar if needed.
7. Manually adjust one of the two lower lift arms up or down to level the Rotary Cutter from left to right.

8. Manually adjust the length of the top-link to level the Rotary Cutter from front to rear. Final deck leveling adjustments will be made later.
9. The tractor's lower 3-point lift arms should be adjusted for lateral float. Please consult your tractor's manual for adjusting instructions.

Driveline Hook-Up

Refer to Figure 1-4:

DANGER

To avoid serious injury or death:

- *Do not engage power take-off while connecting or disconnecting the driveline, or while someone is standing near the driveline. A person's body and/or clothing can become entangled in the driveline.*
- *Tractor power take-off shaft shield, driveline shields, and gearbox shaft shields must be installed and in good working condition to avoid driveline entanglement and projectiles flying off of the driveline.*
- *Make certain driveline yokes are securely fastened at each end. A loose yoke can work free allowing the driveline to rotate uncontrollably.*
- *Do not use a power take-off adapter. The adapter will increase strain on the tractor's power take-off shaft causing possible damage to shaft and driveline. It will also defeat the purpose of the tractor's power take-off shield.*

WARNING

To avoid serious injury or death:

Always follow "Tractor Shutdown Procedure" provided in this manual before dismounting the tractor.

CAUTION

To avoid minor or moderate injury:

Some tractors are equipped with two power take-off speeds. Be certain your tractor's power take-off shaft is set-up to operate at 540 rpm. Do not exceed 540 rpm power take-off speed. Excessive speed can damage drive/driven components and increase the risk of a thrown object hazard.

IMPORTANT: An additional driveline may be required if implement is attached to more than one tractor or if a quick hitch is used.

IMPORTANT: Drivelines with friction clutches must go through a "run-in" prior to initial use and after long periods of inactivity. For detailed instructions, see **"Slip-Clutch Protected Drivelines"** on page 30.

IMPORTANT: Check driveline minimum collapsible length before completing **"Driveline Hook-Up"**. Structural damage to the tractor and cutter can occur if this check is not made. Refer to **"Check Driveline Collapsible Length"** on page 18.

1. If driveline collapsible length has not been checked, go to **"Check Driveline Collapsible Length"** on page 18. Otherwise, continue with step 2 below.
2. Park tractor and cutter on a level surface.
3. Shut tractor down before dismounting. Refer to **"Tractor Shutdown Procedure"** on page 16.
4. If tractor drawbar interferes with the driveline during hook-up, disconnect driveline and move drawbar forward, to the side, or remove.
5. Remove driveline (#5) from driveline support (#6). Driveline support is spring loaded and will rotate up against A-frame (#8).
6. Pull back on driveline pull collar (#7) and push yoke onto the tractor power take-off shaft. Release pull collar and continue to push driveline yoke forward until pull collar pops out and locks in place.
7. Pull on driveline yokes at the tractor and implement end to make sure they are secured to the tractor power take-off shaft and implement gearbox shaft.
8. The tractor's lower 3-point arms should be adjusted for lateral float. Please consult your tractor's manual.
9. Continue with **"Check Driveline Interference"** on page 19.

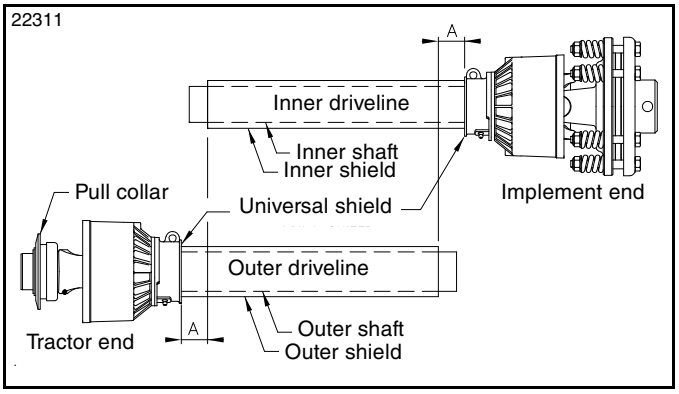

Driveline Shortening
Figure 1-5

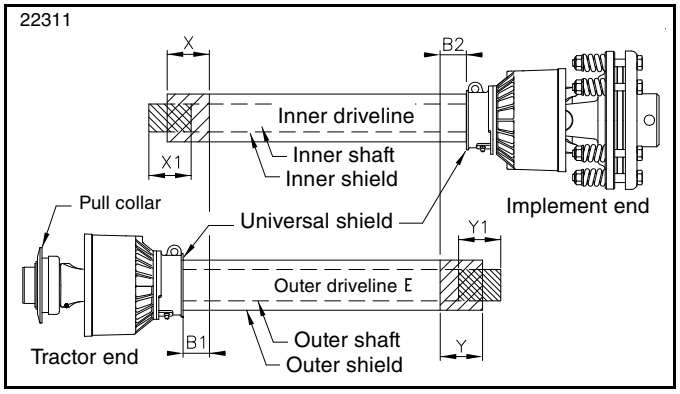

Driveline Shortening
Figure 1-6

Check Driveline Collapsible Length

Refer to Figure 1-5:

> **IMPORTANT:** A driveline that is too long can bottom out causing structural damage to the tractor and implement. Always check driveline minimum length during initial setup, when connecting to a different tractor, and when alternating between using a quick hitch and a standard 3-point hitch. More than one driveline may be required to fit all applications.
>
> **IMPORTANT:** The power take-off shaft and gearbox input shaft must be aligned and level with each other when checking driveline minimum length. A driveline that is too long can damage tractor and implement.

1. With the driveline attached only to the implement, remove outer driveline (tractor end) from inner driveline to separate the two profiles.
2. Park tractor and implement on a level surface.
3. Raise implement until the gearbox input shaft is level and in-line with the tractor's power take-off shaft.
4. Securely block implement at this height with solid, non-concrete supports to keep it from lowering.
5. With the implement resting on the support blocks, shut tractor down according to **"Tractor Shutdown Procedure"** on page 16.

Refer to Figure 1-5:

6. Attach outer driveline to the tractor's power take-off shaft. Refer to steps 5-7 under **"Driveline Hook-Up"** on page 17.
7. Hold inner and outer drivelines parallel to each other as shown and measure distance "A".
   - If "A" is less than 1" (2.5 cm), continue with step 8.
   - If "A" is greater than or equal to 1" (2.5 cm), skip to **"Check Driveline Maximum Length"** on page 19.

Refer to Figure 1-6:

8. Shorten driveline as follows:
   a. Measure 1" (2.5 cm) (**"B1"** dimension) back from outer driveline shield and make a mark at this location on the inner driveline shield.
   b. Measure 1" (2.5 cm) (**"B2"** dimension) back from the inner driveline shield and make a mark at this location on the outer driveline shield.
9. Remove outer driveline from the tractor power take-off shaft and inner driveline from the implement's gearbox shaft.
10. Cut off non-yoke end of inner driveline as follows:
    a. Measure from end of inner shield to scribed mark (**"X"** dimension) and record.
    b. Cut off inner shield at the mark. Cut same amount off the inner shaft (**"X1"** dimension).
11. Cut off non-yoke end of outer driveline as follows:
    a. Measure from end of outer shield to scribed mark (**"Y"** dimension) and record.
    b. Cut off outer shield at the mark. Cut same amount off the outer shaft (**"Y1"** dimension).
12. Remove all burrs and cuttings.
13. Continue with **"Check Driveline Maximum Length"** on page 19.

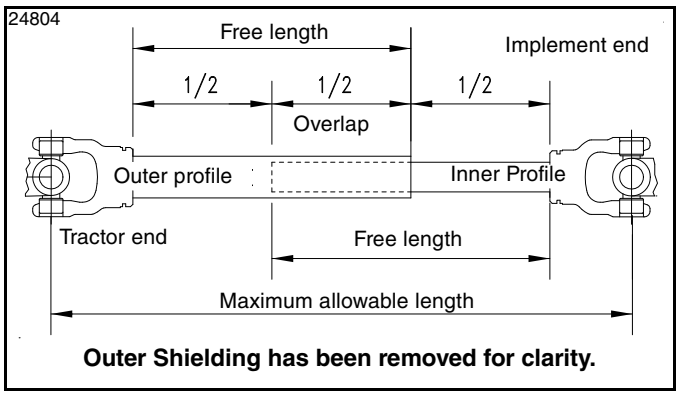

Driveline Maximum Extended Length
Figure 1-7

Check Driveline Maximum Length

Refer to Figure 1-7:

The driveline maximum allowable length must, when fully extended, have a minimum overlap of profile tubes by not less than 1/2 the free length with both inner and outer profile tubes being of equal length.

1. Make sure **"Check Driveline Collapsible Length"** on page 18 has been completed.
2. If attached, unhook the driveline from the tractor and implement.
3. If assembled, pull outer and inner driveline profiles apart.
4. Apply multi-purpose grease to the inside of the outer shaft and reassemble the driveline.
5. Assemble the two driveline profiles together with just 1/2 overlapping of the profile tubes as shown.
6. Measure driveline "Maximum Allowable Length" and record that length here _____.
7. Lubricate driveline u-joints, bearings, and profiles. Refer to **"Lubrication Points"** on page 34.
8. Attach driveline to the implement. Refer to **"Driveline Installation"** on page 15.
9. Without removing the support blocks, continue with **"Driveline Hook-Up"** on page 17.

Check Driveline Interference

Refer to Figure 1-8:

WARNING

To avoid serious injury or death:

A rotating driveline must not exceed an angle of 25 degrees up or down, and never engage a driveline while at an angle exceeding 25 degrees up or down. The driveline can break and send flying projectiles.

1. Start tractor and raise implement slightly off the support blocks used to **"Check Driveline Collapsible Length"**. Drive forward until the implement is clear of the support blocks.

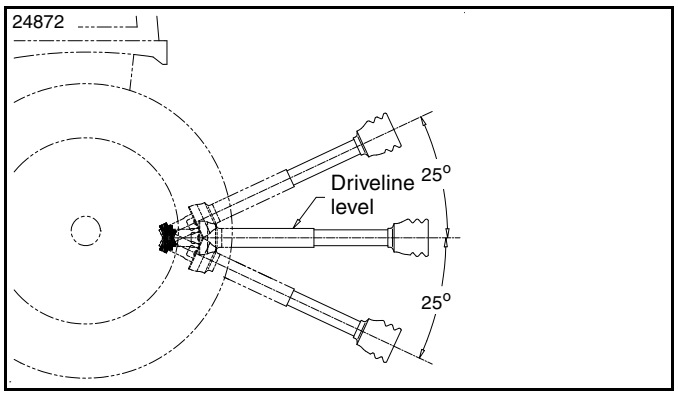

Maximum Allowable Driveline While Operating
Figure 1-8

2. Slowly and carefully lower and raise the cutter to ensure drawbar, tires, and other equipment on the tractor do not contact the cutter frame. If there is an interference:
   a. Back cutter over the support blocks and lower it onto the blocks.
   b. Shut tractor down before dismounting. Refer to **"Tractor Shutdown Procedure"** on page 16
   c. Move or remove drawbar if it interferes with the cutter and make any other necessary corrections.
   d. Repeat steps 1-2 to verify the cutter does not interfere with the tractor.
3. Start tractor, raise implement fully up. Back implement over the support blocks. Do not lower implement onto the support blocks.
4. Without changing the 3-point lift height, shut tractor down using **"Tractor Shutdown Procedure"**.
5. Check to make sure driveline does not exceed any of the limits listed below:
   - Driveline does not exceed maximum length recorded in step 6 under **"Check Driveline Maximum Length"** on this page.
   - Driveline angle does not exceed 25° above horizontal.
6. If driveline exceeds maximum allowable length or 25 degrees up:
   a. Adjust tractor 3-point lift limiter to the height that will keep the driveline within the recommended limits.
   b. If the 3-point left lever does not have a lift height limiter, make a mark with tape or other means to indicate maximum lift height.
7. Start tractor, raise implement slightly, and drive forward enough to clear the support blocks.
8. Lower implement to ground and shut tractor down using **"Tractor Shutdown Procedure"**.

Replaceable Skid Shoes (Accessory)

Refer to Figure 2-1:

326-120A Skid Shoe Kit
(Includes 2 skid shoes & mounting hardware)

Replaceable skid shoes can be purchased from your nearest Land Pride dealer. They bolt to the weld-on skid shoes and help protect weld-on skid shoes and side skirts from wear.

1. Attach skid shoes (#1) to weld-on skid shoes with 3/8"-16 x 1" GR5 plow bolt (#2) and whiz nuts (#3).
2. Tighten whiz nuts to the correct torque.

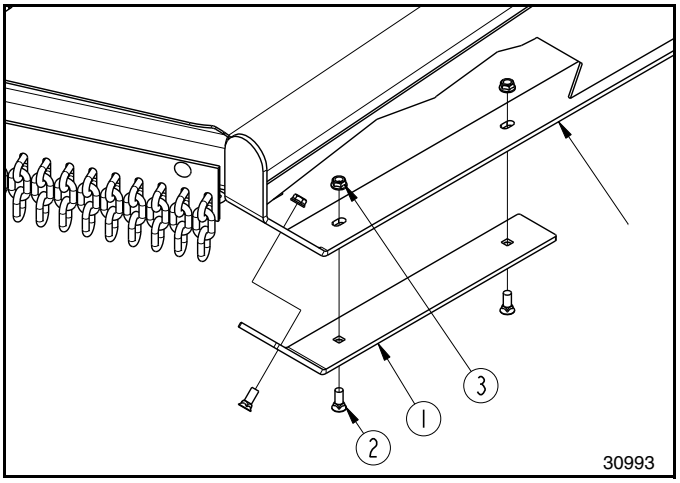

Skid Shoe Accessory
Figure 2-1

Optional Front Guards

DANGER

To avoid serious injury or death:

Rotary Cutters have the ability to discharge objects at high speeds; therefore, the use of front & rear safety guards is mandatory with this cutter. Stop blade rotation if bystanders are in or around the area. It is recommended that a safety shield be placed between the operator and cutter on an open air tractor.

WARNING

To avoid serious injury or death:

Keep all safety guards in place. Rotary Cutters have the ability to discharge objects at high speeds. Use extreme caution when cutting in areas where people may be present. It is best to operate the cutter when no one is nearby. Stop blade rotation if someone is in or around the area.

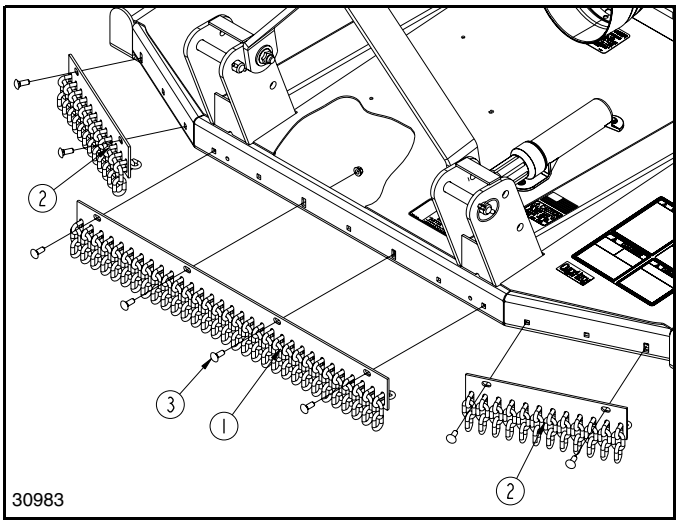

Front Single Chain Guard Option
Figure 2-2

Front Single Chain Guard Assembly

Refer to Figure 2-2:

1. Install front chain guards (#1 & #2) as shown with 3/8"-16 x 1" GR5 carriage bolts (#3), and hex whiz nuts (#4).
2. Tighten all nuts to the correct torque.

Front Rubber Guard Assembly

Refer to Figure 2-3:

1. Install Front Rubber Guards (#5 & #6) as shown with 3/8"-16 x 1" GR5 carriage bolts (#3), front deflector straps (#1 & #2), and hex whiz nuts (#4).
2. Tighten all nuts to the correct torque.

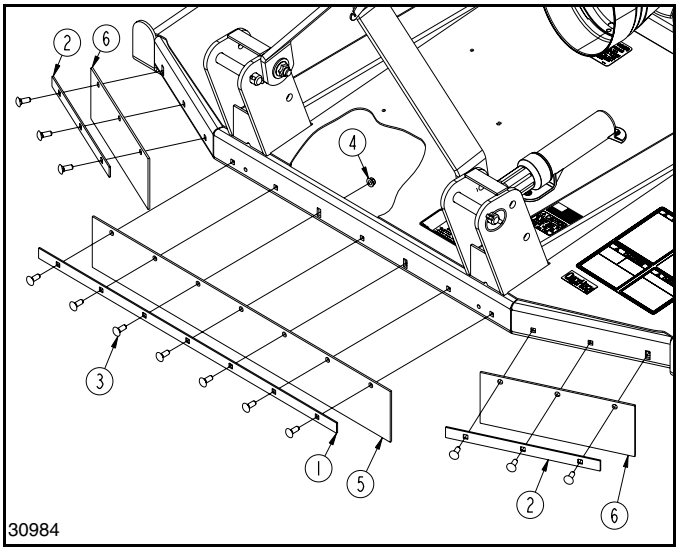

Front Rubber Guard Option
Figure 2-3

Optional Rear Guards

DANGER

To avoid serious injury or death:

Do not remove rear guard unless it is replaced by an approved safety guard. Serious body injury or loss of life can result without an approved rear guard.

Removal of Rear Metal Band Deflector

Refer to Figure 2-4:

A metal band deflector is supplied standard with the cutter and must be removed before the optional Rear Single Chain Guard or Rear Rubber Guard can be installed.

1. Unscrew 3/8" hex whiz nuts (#3).
2. Remove carriage bolts (#2) and Rear Metal Band Deflector (#1).
3. Reattach whiz nuts (#3) and carriage bolts (#2) to metal band deflector (#1) for safe keeping.
4. Store Rear Metal Band Deflector with hardware for future use when not using chain guard or rubber guard.

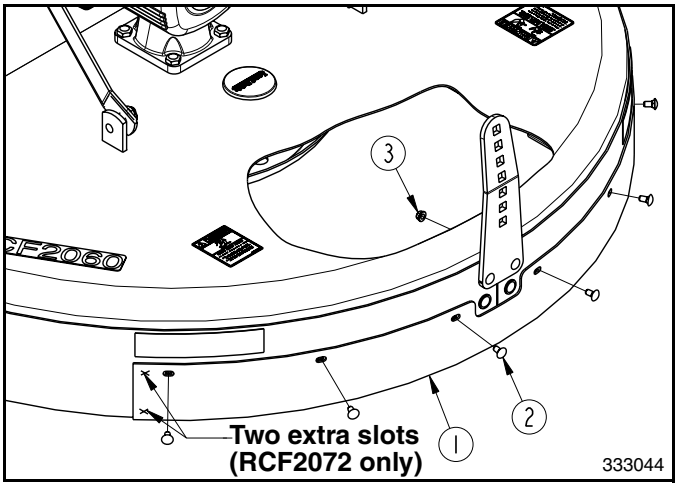

Rear Metal Band Deflector (Standard)
Figure 2-4

Rear Single Chain Guard

Refer to Figure 2-5:

1. Remove Rear Metal Band Deflector. See **"Removal of Rear Metal Band Deflector"** above.
2. Attach ends of chain guard (#1) with 3/8"-16 x 1" GR5 carriage bolts (#3) and hex whiz nuts (#5).
3. Install 3/8"-16 x 3 1/2" GR5 carriage bolts (#4), deflector spacers (#2), and whiz nuts (#5).
4. Tighten all hex whiz nuts (#5) to the correct torque.

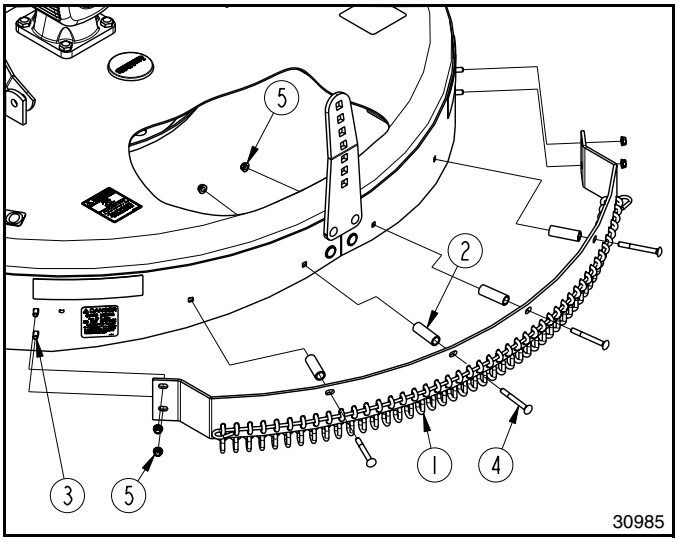

Rear Single Chain Guard Option
Figure 2-5

Rear Rubber Guard installation

Refer to Figure 2-6:

1. Remove Rear Metal Band Deflector. See **"Removal of Rear Metal Band Deflector"** above.
2. Install Rear Rubber Guard (#1) with 3/8"-16 x 3 1/2" GR5 carriage bolts (#3), deflector spacer (#2), and 3/8" whiz nuts (#4).
3. Tighten all hex whiz nuts (#4) to the correct torque.

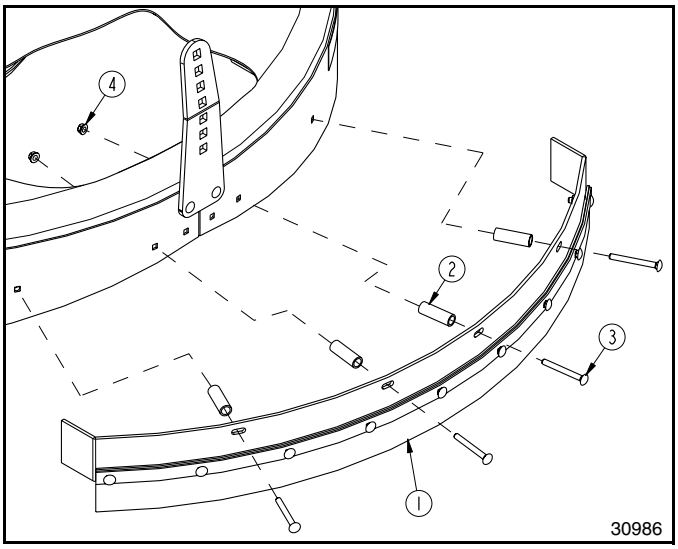

Rear Rubber Guard Option
Figure 2-6

Deck Leveling & Cutting Height

There are 4 primary adjustments that should be made prior to actual field operation:

- **Deck Leveling From Left to Right**
- **Deck Cutting Height**
- **Tractor Center 3-Point Adjustment**
- **Tailwheel Height Adjustment**

Proper adjustment of each of these items will provide for higher efficiency, improved cutting performance, and longer blade life. The following tools will be needed:

- Pliable tape measure
- Spirit or carpenters level
- Set of wrenches and/or socket wrench set
- Protective gloves

WARNING

To avoid serious injury or death:

Always disengage power take-off, put tractor in park or set park brake, shut tractor engine off, remove ignition key, and wait for blades to come to a complete stop before dismounting tractor.

Deck Leveling From Left to Right

Refer to Figure 3-1:

1. Locate tractor with Rotary Cutter on a flat, level surface.
2. Use tractor's hydraulic 3-point control lever to lower cutter until tailwheel makes contact with ground surface.
3. Place a level on the cutter deck as shown. Manually adjust one or both lower 3-point lift arms until deck is level from left to right. On some tractors, only one arm can be adjusted vertically.

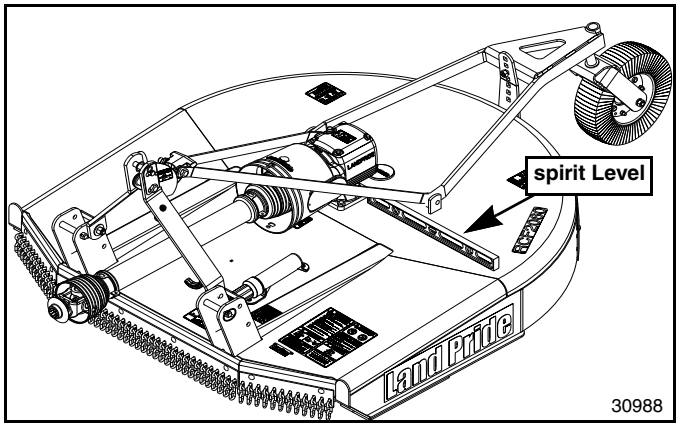

Deck Leveling
Figure 3-1

Deck Cutting Height

Refer to Figure 3-2:

WARNING

To avoid serious injury or death:

Avoid direct contact with cutter blades by wearing a pair of gloves. Cutter blades have sharp edges and burrs that can cause injuries.

IMPORTANT: The front blade tip should be slightly lower than the rear blade tip (about 1" or 2.5 cm lower). If not, the cutter is subject to continuous material flow under it's deck causing horsepower loss, grass clumps, blade wear, and frequent blade sharpening.

1. With gloves on, carefully rotate each blade tip to the position shown in Figure 3-2.
2. Measure distance from cutting tip of front blade to ground surface. This distance is the cutting height.

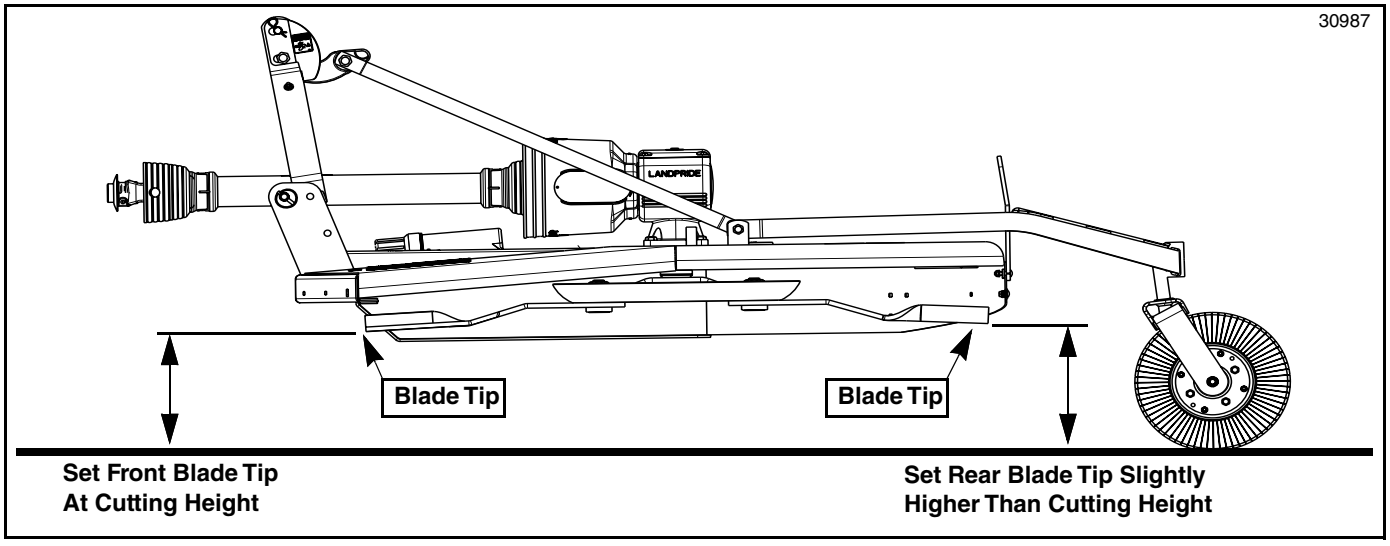

Cutting Height
Figure 3-2

3. Using tractor's 3-point hydraulic control, raise or lower 3-point lift arms until the front blade tip is at the desired cutting height.
4. The top center link should be loose when deck rear is supported by the tailwheel. If not, lengthen center link until loose. Final adjustment will be made later.
5. Measure distance from cutting tip of rear blade to ground. This distance should be slightly higher than the front blade but not more than 1" (2.5 cm) higher.
6. If rear blade is lower than the front blade or is more than 1" higher than the front blade, then the tailwheel height must be adjusted. If needed, see **"Tailwheel Height Adjustment"** instructions below.
7. Repeat steps 1 through 6 until tailwheel and 3-point arms are adjusted to the desired cutting height.
8. Set tractor's 3-point hydraulic control stop once the tailwheel and 3-point arms are adjusted properly.

Tailwheel Height Adjustment

Refer to Figure 3-3:

If front blade tip is set at desired cutting height and back blade tip is at same height or lower or is higher than front blade tip by more than 1" (2.5 cm), then the tailwheel (#1) must be adjusted up or down as follows:

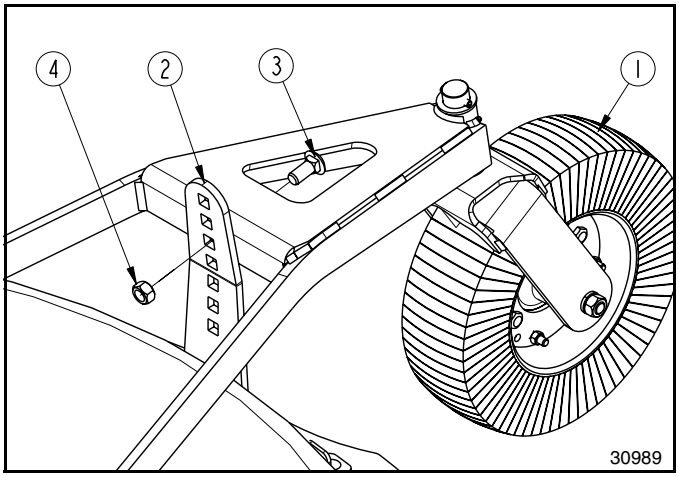

Tailwheel Height Adjustment
Figure 3-3

1. Use tractor's 3-point hydraulic control to lift cutter until tailwheel (#1) clears the ground.
2. Remove hex top locknut (#4) and carriage bolt (#3).
3. Adjust tailwheel as follows:
   - To lower cutting height, raise tailwheel up.
   - To increase cutting height, lower tailwheel down.
4. With tailwheel adjusted to the correct height, replace 5/8"-11 x 1 1/2" GR5 carriage bolt (#3) and top locknut (#4). Tighten top locknut to the correct torque.
5. Readjust tractor's lower 3-point lift arms as needed. See **Deck Cutting Height** instructions on page 22.

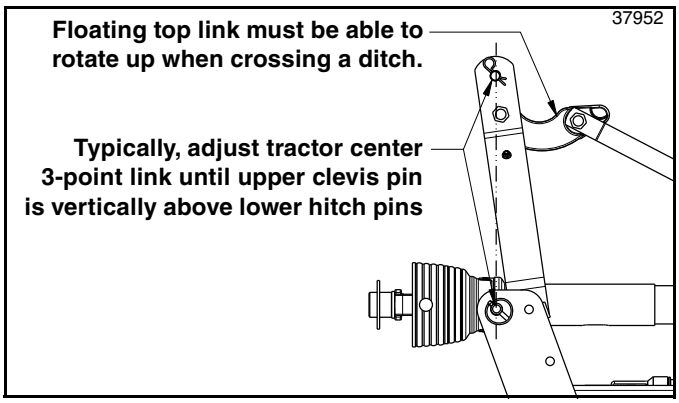

Center 3-Point Link Adjustment
Figure 3-4

Tractor Center 3-Point Adjustment

Refer to Figure 3-4:

1. Lower cutter deck to the nominal cutting height.

NOTE: Customer may adjust tractor center 3-point link to his or her preference. Lengthening tractor center 3-point link allows more movement while going over raised surfaces. Shortening the link allows more movement while crossing over ditches. Also, shortening center link allows the cutter to be carried higher while traveling. Never lengthen center link to where the cutter is carried too low.

2. Typically the tractor center 3-point link is adjusted so that the upper 3-point clevis pin is straight above the lower 3-point hitch pins. This arrangement allows for optimum ground contour following performance.
3. Lock tractor center link in this position once correct length is achieved. Adjustment on center 3-point link can be made depending on customer's preference.

Operating Checklist

Hazard control and accident prevention are dependent upon the awareness, concern, prudence, and proper training involved in the operation, transport, storage, and maintenance of the Rotary Cutter. Therefore, it is absolutely essential that no one operates the Rotary Cutter unless they have read, fully understood, and are totally familiar with the Operator's Manual. Make sure the operator has paid particular attention to:

- **Important Safety Information**, page 1
- **Section 1: Assembly & Set-up,** page 13
- **Section 2: Accessory & Options Set-up**, page 20
- **Section 3: Adjustments**, page 22
- **Section 4: Operating Instructions**, page 24
- **Section 5: Maintenance & Lubrication**, page 28

Perform the following inspections before using your Rotary Cutter.

Operating Checklist

✔	Check	Page
	Make sure all guards and shields are in place. Refer to "Important Safety Information".	1
	Follow hook-up & driveline installation. Refer to "Tractor Hook-Up" & "Driveline Installation".	15
	Make all required adjustments. Refer to "Section 3: Adjustments".	22
	Preform all required maintenance. Refer to "Section 5: Maintenance & Lubrication".	28
	Lubricate cutter and driveline as needed. Refer to "Lubrication Points".	34
	Lubricate all gearboxes and replace oil plugs properly. Refer to "Gearbox".	34
	Check cutter initially and periodically for loose bolts and pins. Refer to "Torque Values Chart".	40

Safety Information

⚠ DANGER

To avoid serious injury or death:

- *Tractor power take-off shaft shield, driveline shields, and gearbox shaft shields must be installed and in good working condition to avoid driveline entanglement and projectiles flying off of the driveline.*
- *Do not engage power take-off while connecting or disconnecting the driveline, or while someone is standing near the driveline. A person's body and/or clothing can become entangled in the driveline.*
- *Always disconnect the driveline from the power take-off shaft before servicing underside of cutter. The tractor can be started with the power take-off engaged.*
- *Be sure deck is lowered to the ground and all hydraulic pressure is relieved before disconnecting or reconnecting hydraulic line and/or fittings between Rotary Cutter and tractor hydraulic system.*
- *Never place hands or feet under the deck or attempt to make adjustments to the cutter with power take-off engaged. Cutter blades rotating at high speeds cannot be seen and are located close to the deck sides. Body extremities will be cut off instantly.*
- *Do not use a power take-off adapter. The adapter will increase strain on the tractor's power take-off shaft causing possible damage to shaft and driveline. It will also defeat the purpose of the tractor's power take-off shield.*
- *Rotary Cutters have the ability to discharge objects at high speeds; therefore, the use of front & rear safety guards is mandatory with this cutter. Stop blade rotation if bystanders are in or around the area. It is recommended that a safety shield be placed between the operator and cutter on an open air tractor.*
- *Do not use cutter as a fan. Cutting blades are not properly designed or guarded for this use.*

⚠ WARNING

To avoid serious injury or death:

- *Allow only persons to operate this implement who have fully read and comprehended this manual, and who are properly trained in the safe operation of this implement.*
- *Never carry riders on the equipment or power machine. Riders can obstruct the operator's view, interfere with controls, be pinched by moving components, become entangled in rotating components, struck by objects, thrown about, fall off and be run over, etc.*
- *Select a safe ground speed that will allow adequate control of steering and stopping. Never exceed 20 mph (32 km/h) with attached equipment. Rough terrain requires a slower speed.*
- *Do not operate a broken or bent driveline. Such a driveline will break apart while rotating at high speeds. Always remove the implement from use until the damaged driveline can be repaired or replaced.*
- *A rotating driveline must not exceed an angle of 25 degrees up or down, and never engage a driveline while at an angle exceeding 25 degrees up or down. The driveline can break and send flying projectiles.*
- *Do not operate and/or travel across inclines where the tractor and/or implement can rollover. Consult your tractor's manual for acceptable inclines the tractor is capable of traveling across.*
- *Always disengage power take-off before lifting cutter fully up. Never operate cutter in the raised position. The cutter can discharge objects at high speeds.*
- *Always follow "Tractor Shutdown Procedure" provided in this manual before dismounting the tractor.*
- *Perform scheduled maintenance. Check for loose hardware, missing parts, broken parts, structural cracks, and excessive wear. Make repairs before putting the implement back into service.*

- *Do not use implement as a man lift or work platform. It is not properly designed or guarded for this use.*
- *Do not use implement to lift objects; to pull objects such as fence posts, stumps, etc; or to push objects. The unit is not designed or guarded for these uses.*
- *Do not exceed rated cutting capacity of your cutter. See specifications & capacities for specified cutting capacity. Exceeding rated cutting capacity can damage drive components, cutter blades, and deck components.*
- *Buildup of debris around moving components and gearboxes is a fire hazard. Keep rotating parts and gearboxes free from debris.*
- *Improper oil level can cause bearing failure and be a fire hazard. Maintain proper gearbox oil level.*
- *Some tractors are equipped with two power take-off speeds. Be certain your tractor's power take-off shaft is set-up to operate at 540 rpm. Do not exceed 540 rpm power take-off speed. Excessive speed can damage drive/driven components and increase the risk of a thrown object hazard.*

Inspect Tractor & Cutter

Make the following inspections with cutter attached to a tractor, power take-off disengaged, and stopped:

1. Park tractor and cutter on a level surface.
2. Disengage power take-off, place gear selector in park, set park brake, shut tractor off, and remove ignition key. Make sure cutter blades have come to a complete stop before dismounting from tractor.
3. Inspect tractor safety equipment to make sure it is installed and in good working condition.
4. Inspect cutter safety equipment to make sure it is installed and in good working condition.
5. Check driveline to make certain it is securely connected to the tractor power take-off shaft and cutter gearbox shaft. Also, make certain that the guards are in good working condition and in place.
6. Carefully raise and lower implement to ensure that the drawbar, tires, and other equipment on the tractor do not contact cutter frame or driveline.
7. Check all hoses and wires to be sure that they will not come in contact with rotating driveline.
8. With cutter deck resting on solid supports, power take-off disengaged, and blade rotation completely stopped:
   - Check for and remove foreign objects wrapped around blade spindles.
   - Check for nicked, bent, broken, and worn cutting blades. Replace or sharpen blades as required. Refer to **"Cutter Blade Maintenance"** on page 28.
9. Remove solid supports from under the deck.
10. Verify cutter is set at the correct cutting height. See **"Deck Leveling & Cutting Height"** on page 22.

The remaining inspections are made by engaging the power take-off to check for vibrations.

⚠ WARNING

To avoid serious injury or death:

- *Stop power take-off immediately if vibration continues after a few revolutions during start-up and anytime thereafter. Wait for all components to come to a complete stop before dismounting from tractor to check for probable causes. Make necessary repairs and adjustments before continuing.*
- *Some tractors are equipped with two power take-off speeds. Be certain your tractor's power take-off shaft is set-up to operate at 540 rpm. Do not exceed 540 rpm power take-off speed. Excessive speed can damage drive/driven components and increase the risk of a thrown object hazard.*

11. Start tractor, set throttle to idle or slightly above idle, and slowly engage power take-off. Initial start-up vibration is normal and should stop after a few revolutions. Disengage power take-off immediately if vibration continues.
12. Once cutter is running smoothly, increase tractor power take-off speed to 540 rpm. Stop power take-off rotation immediately if vibration occurs.
13. Investigate cause of vibration and make repairs before putting cutter back into service.

Transporting

⚠ WARNING

To avoid serious injury or death:

- *Always disengage power take-off and wait for the driveline to stop rotating before raising the implement to the transport position.*
- *When traveling on public roadways, travel in such a way that faster moving vehicles may pass safely. Use hazard lights, clean reflectors, and a slow moving vehicle sign that is visible from the back to warn operators in other vehicles of your presence. Always comply with all federal, state, and local laws.*
- *Select a safe ground speed that will allow adequate control of steering and stopping. Never exceed 20 mph (32 km/h) with attached equipment. Rough terrain requires a slower speed.*

1. Make sure driveline does not contact tractor or cutter when raising cutter to transport position.
2. Reduce tractor ground speed when turning and leave enough clearance so cutter does not contact obstacles such as buildings, trees, or fences.
3. Limit transport speed to 20 mph. Transport only with a tractor of sufficient size and horsepower.
4. When traveling on roadways, transport in such a way that faster moving vehicles may pass you safely.
5. Shift tractor to a lower gear when traveling over rough or hilly terrain.

Blade Engagement & Disengagement

Cutter blades can lock-up against each other during start-up and shut-down especially if the tractor's power take-off engagement is **"INSTANT ON"** and **"INSTANT OFF"**. Following Blade Engagement and Blade Disengagement instructions below will help eliminate blade lock up.

Blade Engagement

1. Increase throttle to a speed just enough to get the cutter started without stalling tractor while slowly engaging power take-off drivelines. Use tractor's power take-off soft start option if available.
2. Ensure that all power shafts are rotating and that the cutter is not vibrating excessively after ramping up to power take-off speed for at least 3 seconds. If excessive vibration continues after 3 seconds at full power take-off speed, disengage power take-off immediately, shut down tractor, and remove key.
3. Check blades for a lock-up situation. Block cutter deck up before working under the unit. Unlock blades, remove support blocks, and repeat **"Blade Engagement"** instructions.

Blade Disengagement

1. Slowly decrease throttle speed until engine idle speed is reached and then disengage power take-off.
2. Engage tractor park brake, shut tractor engine off, and remove ignition key. Stay on tractor until blades have come to a complete stop.

Unhook Rotary Cutter

Unhook Rotary Cutter from the tractor as follows:

1. See **"Long-Term Storage"** on page 33 if cutter is to be stored for a long time.
2. Park on a level, solid surface and lower deck to ground level or onto blocks.
3. Engage tractor park brake, shut tractor engine off, and remove ignition key. Stay on tractor until blades have come to a complete stop.
4. Pull back on driveline pull collar and hold while pulling driveline yoke from tractor power take-off shaft.
5. Unhook 3-point hitch from tractor and drive tractor forward several feet.
6. Reinstall hitch pins, linchpins, and hair pin cotters in cutter hitch for safe keeping.
7. Collapse driveline by pushing tractor end of driveline towards cutter gearbox.
8. Rotate driveline storage hook down and place driveline in storage hook.

Field Operation

⚠ DANGER

To avoid serious injury or death:

Clear area to be cut of debris and other unforeseen removable objects before cutting. Mark non-removable hazards such as tree stumps, post stubs, protruding objects, rocks, drop-offs, holes, etc. with a visible flag.

IMPORTANT: Maintain correct power take-off speed. Loss of power take-off speed will allow blades to swing back resulting in ragged, uneven cutting.

IMPORTANT: Your cutter is equipped with free swinging cutting blades to reduce shock loads when striking obstacles. However, it is best to avoid striking obstacles to extend cutter and blade life.

NOTE: Do not cut in wet conditions. Wet material will build up on the deck underside creating poor discharge, high wear, and additional horsepower.

Periodically disengage power take-off, turn off tractor, remove key & check for objects wrapped around blade spindle. Block deck up before removing objects.

Frequently inspect cutter for loose bolts and nuts. Tighten all loose hardware as indicated in the **"Torque Values Chart"** on page 40.

1. Thoroughly inspect area to be cut for debris and unforeseen objects. Mark any potential hazards.
2. Follow **"Blade Engagement"** instructions on right side of this page to start cutter blades turning.
3. Optimum ground speed depends on density of material being cut, tractor horsepower, and terrain. Always operate tractor at cutter's full rated power take-off speed in a gear range that allows the cutter to make a smooth cut without lugging the tractor down, usually between 2-5 mph (3-8 km/h).
4. Follow **"Blade Disengagement"** instructions on this page to stop cutter blades. After the first 50 ft (15 m), disengage power take-off and check to see that the cutter is adjusted properly.
5. Do not engage power take-off when cutter is in the fully raised or lowered positions.
6. Periodically disengage power take-off, shut down tractor, remove key, and check for foreign objects wrapped around the blade spindle. Block cutter deck up before removing objects.
7. Frequently inspect cutter for loose bolts and nuts. Tighten all loose bolts and nuts as indicated in the **"Torque Values Chart"** on page 40.
8. For additional information, see **"General Operating Instructions"** on page 27.

General Operating Instructions

It is important that you familiarize yourself with the Operator's Manual, completed Operators Checklist, properly attached cutter to your tractor, made leveling adjustments, and preset your cutting height before beginning a running operational safety check on your Land Pride Rotary Cutter.

The running operational safety check may now be done. It is important that at any time during this safety check you detect a malfunction in either the cutter or tractor that you immediately shut the tractor off, remove its key, and make necessary repairs and/or adjustments before continuing on.

Make sure before starting the tractor that the park brake is engaged, power take-off is disengaged, and cutter is resting on the ground. Start tractor and set engine throttle speed at a low idle. Raise cutter with tractor's rear hydraulic lift control lever to transport position making sure that the driveline does not bind and does not contact the cutter frame. Lower cutter to ground and at a low engine speed engage power take-off. If everything is running smoothly at a low idle, slowly raise cutter to cutting height checking for bind or chatter in the driveline. Lower the cutter to the ground and increase tractor's engine rpm until it reaches cutter full power take-off operating speed of 540 rpm. If everything is still running smoothly, once more raise the cutter to cutting height to check for driveline bind or chatter. Lower cutter to ground, return engine to a low idle, and disengage power take-off. Position adjustable stops on the tractor's hydraulic lift lever so the cutter can be consistently returned to the same cutting and transport height.

You should now be ready to transport to your cutting site at a safe ground speed. On roadways transport in such a manner that faster moving vehicles can easily see you and pass you safely. Reduce your speed when traveling over rough and hilly terrain. Avoid quick or sharp steering corrections. Take extra care to ensure that the mower doesn't come into contact with obstacles such as trees, buildings or fences. Use accessory lights and appropriate reflective devices to provide adequate warning to pedestrians and other vehicle operators when traveling on public roads and in the dark of night. Comply with all local, state, and federal laws.

It is important that you inspect the area where you will be cutting and clear it of safety hazards and foreign objects either before or after you arrive at the cutting site. Never assume the area is clear. Cut only in areas you are familiar with and are free of debris and unseen objects. Extremely tall grass should be cut twice to detect potential hazards. In the event you do strike an object stop the cutter and tractor immediately to inspect and make necessary repairs to the cutter before resuming operation. It really pays to inspect a new area and to develop a safe plan before cutting.

You will need to maintain 540 rpm power take-off speed and 2-5 mph (3-8 km/h) ground speed to produce a clean cut. Make a tractor gear and range selection that will enable you to maintain these speed combinations. Generally the quality of cut is better at lower ground speeds. Dense ground cover will create the need to slow down even more. In certain conditions tractor tires will roll grass down resulting in an uneven cut when the grass fails to rebound. Should this happen you may try reversing the direction of cut and/or double cut to achieve the desired finish. Avoid very low cutting heights especially on extremely uneven terrain. Always cut downward on slopes and avoid crossing the face of steep slopes. Avoid sharp drops and cross diagonally through dips to prevent hanging up the tractor and cutter. Slow down in turns. Remember to look back often. Now that you're prepared and well briefed you may begin cutting. Begin mowing by doing the following:

- Reducing tractor's engine rpm and set cutter is on the ground in the cutting position.
- Engage power take-off and then raise engine rpm to the appropriate power take-off speed and begin cutting.

Make wide turns when possible. Three-point hitch and optional Quick Hitch models can be lifted into transport position to make tight turns and to reverse direction. Try increasing or decreasing ground speed to determine the effect on quality of cut. With a little practice you will be pleased with what you and your Land Pride Rotary Cutter can do. Whether you are done mowing, need to take a break, or just need to make a few adjustments to the cutter, remember to always do the following:

- Reduce tractor's engine rpm, disengage power take-off and stop on level ground. Set park brake, turn off engine, and remove ignition key.
- Stay on the tractor until the cutter blades have come to a complete dead stop.

Maintenance

Proper servicing and adjustments are key to the long life of any implement. With careful inspection and routine maintenance, you can avoid costly downtime and repair.

Check all bolts and pins after using the unit for several hours and on a regular basis thereafter to ensure they are tight and secured. Replace worn, damaged, or illegible safety labels by obtaining new labels from your Land Pride Dealer.

DANGER

To avoid serious injury or death:

- *Always disconnect the driveline from the power take-off shaft before servicing underside of cutter. The tractor can be started with the power take-off engaged.*
- *Always secure equipment with solid, non-concrete supports before working under it. Never go under equipment supported by concrete blocks or hydraulics. Concrete can break, hydraulic lines can burst, and/or hydraulic controls can be actuated even when power to the hydraulics is off.*

WARNING

To avoid serious injury or death:

- *Make sure controls are all in the neutral position or park before starting the power machine.*
- *Do not alter implement or replace parts on the implement with other brands. Other brands may not fit properly or meet OEM (Original Equipment Manufacturer) specifications. They can weaken the integrity and impair the safety, function, performance, and life of the implement. Replace parts only with genuine OEM parts.*
- *Buildup of debris around moving components and gearboxes is a fire hazard. Keep rotating parts and gearboxes free from debris.*
- *Improper oil level can cause bearing failure and be a fire hazard. Maintain proper gearbox oil level.*

Cutter Blade Maintenance

WARNING

To avoid serious injury or death:

- *Do not operate cutter with blades that are out-of-balance, bent, excessively worn, excessively nicked, or with blade bolts that are excessively worn. Damaged components can break at high speeds and be ejected in a hazardous manner.*
- *Do not attempt to straighten a bent blade or weld on a blade. Do not attempt to modify a blade such as hard surfacing, heat treating, cold treating, or by any other method. Always replace blades with genuine OEM blades to assure safety.*

IMPORTANT: Replace cutting blades with genuine Land Pride blades only. Blades must be replaced in sets. Not replacing blades in sets will result in an out-of-balance condition that could contribute to premature bearing wear/breakage and/or structural cracks in gearbox and/or deck.

Always inspect cutting blades before each use. Make certain they are properly installed and are in good working condition. Replace any blade that is damaged, worn, bent, or excessively nicked. Small nicks can be ground out.

Remove blades and sharpen or replace as follows:

1. Place tractor gear selector in park and set brakes, shut engine off, and remove ignition key.
2. Disconnect main driveline from tractor power take-off and secure cutter deck in the up position with solid supports before servicing underside of cutter.
3. Inspect cutting blades. Make certain they are properly installed and are in good working condition. Replace any blade that is damaged, worn, bent, or excessively nicked. Small nicks can be ground out.

Refer to Figure 5-1:

4. Remove access cover (#5).
5. Rotate blade bolt (#1) until in alignment with access hole (A).
6. Blade bolt (#1) is keyed and will not turn freely. Unscrew locknut (#4) to remove cutting blade (#6).
7. Repeat steps 5 & 6 for the other blade.
8. Both blades should be sharpened at the same angle as the original cutting edge and must be replaced or re-ground at the same time to maintain proper balance. The following precautions should be taken when sharpening blades:
   a. Do not remove more material than necessary.
   b. Do not heat and pound out a cutting edge.
   c. Do not grind blades to a razor edge. Leave a blunt cutting edge approximately 1/16" (2 mm) thick.
   d. Always grind cutting edge so end of blade remains square to cutting edge and not rounded.
   e. Do not sharpen back side of blade.
   f. Both blades should weigh the same with not more than 1 1/2 oz (0.04 kg) difference. Unbalanced blades will cause excessive vibration which can damage gearbox bearings and create structural cracks.
9. Carefully check cutting edges of blades in relation to blade carrier rotation to ensure correct blade placement. Blade rotation is counterclockwise with cutting edge leading. Airfoil (lift) must be oriented towards the top of the deck.

IMPORTANT: Examine blade bolts (#1) and flat washers (#2) for excessive wear and replace if worn.

⚠ WARNING

To avoid serious injury or death:

A locknut that has been removed can lose its thread locking properties. Reusing a used locknut can result in a thrown blade. Always use a new locknut when installing blades.

IMPORTANT: Examine blade bolts (#1) and flat washers (#2) for excessive wear and replace if worn.

10. Insert blade bolt (#1) through blade (#6), dish pan (#4), and flat washer (#2). Secure blade with a **new locknut (#3)** and torque to 450 ft-lbs (610 Nm).
11. Replace access cover (#5).
12. If replacing dishpan (#4), castle nut (#7) on gearbox output shaft should be torqued to 450 ft-lbs (610 Nm). minimum and secured with cotter pin (#8) with both legs bent opposite directions around the nut.

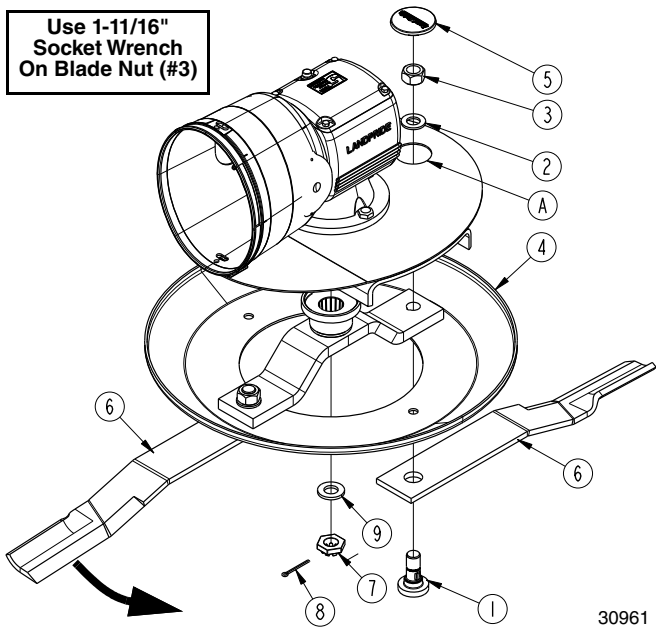

Land Pride Cutter Blade Parts

#	Part No.	Part Description
	318-586A	BLADE BOLT KIT . . (items 1, 2, & 3 below)
1	802-277C	BLADE BOLT 1 1/8-12 x 3 7/16 WITH KEY
2	804-147C	WASHER FLAT 1 HARD ASTMF436
3	803-170C	NUT HEX TOP LOCK 1 1/8-12 PLATE
4	312-815H	RCF2060 DISHPAN WELDMENT
4	326-804H	RCF2072 DISHPAN WELDMENT
5	840-273C	PLUG LP 3" ID RUBBER
6	820-198C	.RCF2060 STANDARD BLADE 25"LG. CCW
6	820-566C	RCF2072 STANDARD BLADE 29"LG. CCW
6	820-212C	. . RCF2060 LOW LIFT BLADE 25"LG. CCW
6	820-213C	RCF2072 LOW LIFT BLADE 31"LG. CCW

Cutter Blade Assembly (Counterclockwise Rotation)
Figure 5-1

Driveline Maintenance

DANGER

To prevent serious injury or death:

- *Tractor power take-off shaft shield, driveline shields, and gearbox shaft shields must be installed and in good working condition to avoid driveline entanglement and projectiles flying off of the driveline.*
- *Always disconnect driveline from the tractor before servicing the drivetrain and components powered by the drivetrain. A person can become entangled in the drivetrain if the tractor is started and the power take-off is engaged.*

WARNING

To avoid serious injury or death:

- *Always follow "Tractor Shutdown Procedure" provided in this manual before dismounting the tractor.*
- *Do not operate a shear bolt driveline if the snap ring is missing on the gearbox shaft. This snap ring prevents the driveline from slipping off the shaft when the shear bolt shears.*
- *A slip clutch that has been in use or has slipped for as little as only two or three seconds during run-in may be too hot to touch. Allow a hot clutch to cool before working on it.*
- *Do not operate a broken or bent driveline. Such a driveline will break apart while rotating at high speeds. Always remove the implement from use until the damaged driveline can be repaired or replaced.*

Shear Bolt Protected Drivelines

This driveline is attached to the cutter with a shear bolt. The shear bolt is designed to protect the drivetrain and tractor by shearing when the blades make contact with objects that cannot be cut easily. Replace shear bolt & nylock nut with only genuine Land Pride part numbers. Do not use a shear bolt with a higher grade value as it may not protect the drivetrain and tractor. See available replacement part numbers below.

Shear Bolt & Nut Part Numbers

Part No.	Part Description
802-264C	HHCS 1/2-13X3 1/2 GR2
803-147C	NUT HEX NYLOCK 1/2-13
OR	
803-020C	NUT HEX 1/2-13 PLT
803-036C	NUT HEX JAM 1/2-13 PLT

Slip-Clutch Protected Drivelines

The drive-train is protected from shock loads with a two plate slip-clutch. The slip-clutch must be capable of slippage during operation. Always do a "clutch run-in" operation at the beginning of each season and after long periods of inactivity to remove any oxidation that may have accumulated on the friction surfaces. Repeat "clutch run-in" instructions when moisture and/or condensation seizes the inner friction plates.

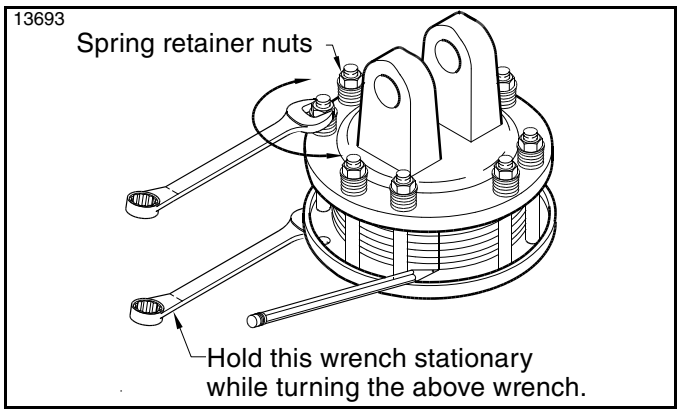

Clutch Run-in
Figure 5-2

Slip-Clutch Run-In

Refer to Refer to Figure 5-2:

WARNING

To avoid serious injury or death:

- *Always follow "Tractor Shutdown Procedure" provided in this manual before dismounting the tractor.*
- *A slip clutch that has been in use or has slipped for as little as only two or three seconds during run-in may be too hot to touch. Allow a hot clutch to cool before working on it.*

1. Using a pencil or other marker, scribe a line across the exposed edges of the clutch plates and friction discs.
2. Carefully loosen each of the 8 spring retainer nuts by exactly 2 revolutions. It will be necessary to hold hex end of retainer bolt in order to count the exact number of revolutions.
3. Start tractor and engage power take-off drive for 2-3 seconds to permit slippage of the clutch surfaces. Disengage power take-off, then re-engage a second time for 2-3 seconds. Disengage power take-off, shut off tractor, and remove key. Wait for all components to stop before dismounting from tractor.
4. Inspect clutch and ensure that the scribed markings made on the clutch plates have changed position. Slippage has not occurred if any two marks on the friction disc and plate are still aligned. A clutch that has not slipped must be disassembled to separate the friction disc plates. See **"Slip-Clutch Assembly / Disassembly"** on page 31.
5. Tighten each of the 8 spring retainer nuts on the clutch housing exactly 2 revolutions to restore the clutch to the original setting pressure.
6. The clutch should be checked during the first hour of cutting and periodically each week. An additional set of scribe marks can be added to check for slippage. See Figure 5-4 on page 31 to adjust spring length

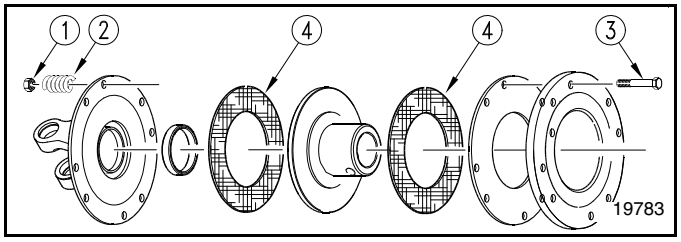

Clutch Assembly
Figure 5-3

Slip-Clutch Assembly / Disassembly

Disassembly

IMPORTANT: Refer to Figure 5-4. Be sure to measure and record length (“A”) of each spring before disassembling the clutch.

Refer to Figure 5-3:

After recording each spring length, remove spring retainer nuts (#1), springs (#2), and bolts (#3). Separate each friction disc (#4) from their adjacent metal surfaces. Refer to Parts Manual for a detailed parts breakdown.

Inspection

Inspect all parts for excessive wear and condition. Clean all parts that do not require replacement.The original friction disc thickness is 1/8" (3.2 mm) and should be replaced if thickness falls below 3/64" (1.1 mm). If clutches have been slipped to the point of “smoking”, the friction discs may be damaged and should be replaced. Heat build-up may also affect the yoke joints.

Assembly

Refer to Figure 5-4:

Reassemble each friction disc (#4) next to the metal plate it was separated from. Install bolts (#3) through the end plates and intermediate plates as shown. Place springs (#2) over bolts (#3) and secure with nuts (#1). Progressively tighten each spring retainer bolt until correct spring height “A” dimension is obtained.

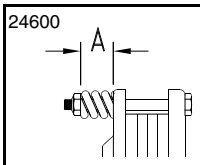

A = Measured length of each spring before disassembling slip clutch. Use “A” dimension in table below if measurements were not taken before disassembling slip clutch.

Model No.	Driveline No.	Power Take-Off Speed	Cat No.	Spring Height “A” Dimension
RCF2060	312-026A 826-657C	540	3	1.27" to 1.31" (32.2 to 33.3 mm)
RCF2072	312-728A 826-656C	540	3	1.27" to 1.31" (32.2 to 33.3 mm)

Clutch Adjustment
Figure 5-4

Spring Height Gauge

Refer to Figure 5-5:

A spring gauge can be made to measure the spring height. This gauge will save time tightening the springs and can be reused each time the spring nuts are loosened and re-tightened.

1. Cut a 1" x 1" angle iron (#1) to length “A” provided in Figure 5-4. (Angle iron supplied by customer.)
2. Place fabricated gauge (#1) over a spring and its end against the clutch plate.
3. Tighten spring nut (#2) until the bottom of the nut is flush with the top of the angle gauge.
4. Repeat steps 2-3 on each clutch spring.

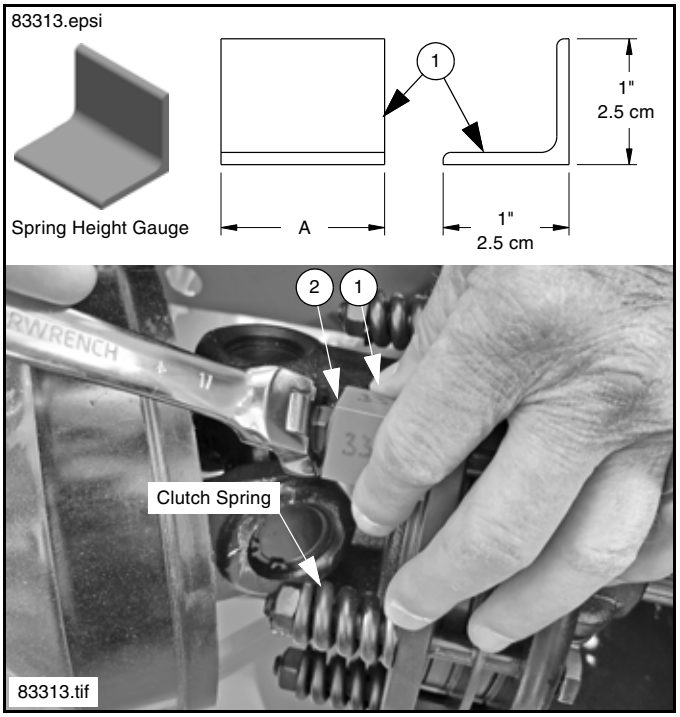

Spring Height Gauge
Figure 5-5

Accessory Skid Shoe Maintenance

Refer to Figure 5-5 on page 32:

WARNING

To avoid serious injury or death:

Excessive wear on skid shoes can damage side panels, cause inadequate operation of cutter, and create a safety hazard. Always replace skid shoes at the first sign of wearing thin.

There are skid shoes mounted on the cutter sides. Check both skid shoes for wear and replace if necessary. Order only genuine Land Pride parts from your local Land Pride dealer.

1. Remove 3/8" hex whiz nuts (#3), 3/8" plow bolts (#2), and skid shoe (#1) as shown.
2. Plow bolts should be checked for wear and replaced if necessary.
3. Attach new skid shoe (#1) to cutter with existing 3/8" plow bolts (#2) and secure with 3/8" hex whiz nuts. Tighten to the correct torque.
4. Repeat on opposite side.

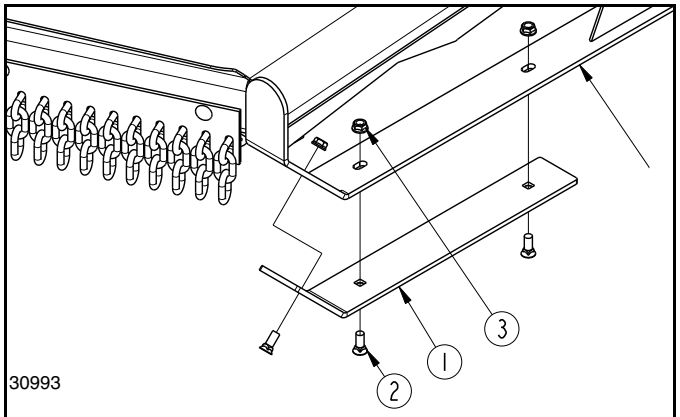

Land Pride Skid Shoe Replacement Parts

#	Part No.	Part Description
1	326-221D	SKID SHOE
2	802-603C	PLOW 3/8" - 16 x 1" GR5
3	803-198C	NUT HEX WHIZ 3/8-16 PLT

Skid Shoe Replacement
Figure 5-5

Long-Term Storage

Clean, inspect, service, and make necessary repairs to the implement when storing it for long periods and at the end of the season. This will help to ensure the unit is ready for field use the next time you hook-up to it.

DANGER

To avoid serious injury or death:

- *Always disconnect the driveline from the power take-off shaft before servicing drivetrain and cutter blades. The power take-off can be engaged if the tractor is started.*
- *Always secure equipment with solid, non-concrete supports before working under it. Never go under equipment supported by concrete blocks or hydraulics. Concrete can break, hydraulic lines can burst, and/or hydraulic controls can be actuated even when power to the hydraulics is off.*

WARNING

To avoid serious injury or death:

Always store cutter with 3-point hitch pivoted back as far as possible. The floating 3-point hitch when not hooked to a tractor can fall backwards unexpectedly causing bodily injury.

1. Clean off any dirt and grease that may have accumulated on the cutter and moving parts. Scrape off compacted dirt from the bottom of deck and then wash surface thoroughly with a garden hose. A coating of oil may also be applied to the lower deck area to minimize oxidation.
2. Check blades and blade bolts for wear. Replace if necessary. See **"Cutter Blade Maintenance"** on page 28.
3. Inspect for loose, damaged or worn parts, and adjust or replace as needed.
4. Repaint parts where paint is worn or scratched to prevent rust. Ask your Land Pride dealer for aerosol touch-up paint. Paint is also available in touch-up bottles with brush, quarts, and gallon sizes by adding TU, QT, or GL to the end of the aerosol part number.

Land Pride Touch-up Paint

Part No.	Part Description
821-066C	PAINT ORANGE SPRAY CAN
821-070C	PAINT GP GLOSS BLACK SPRAY CAN

5. Replace all damaged or missing decals.
6. Lubricate as noted under **"Lubrication Points"** on page 34.
7. Store cutter on a level surface in a clean, dry place. Inside storage will reduce maintenance and make for a longer cutter life.
8. Follow all unhooking instructions on page 26 when disconnecting tractor from cutter.

Ordering Replacement Parts

Land Pride offers equipment in factory standard Beige with black highlights. This implement may also be purchased in Orange, Green, or Red.

When ordering an optional color, the suffix number corresponding to the color must be added at the end of the part number. Parts ordered without the suffix number will be supplied in factory standard colors.

82 . . . . . Orange
85 . . . . . Black

For example, if you are ordering a replacement part with part number 555-555C and the existing part is orange, then add the suffix 82 to the end of the number to make the part number read 555-555C82.

Lubrication Points

Lubrication Legend

Multi-purpose spray lube | Multi-purpose grease lube | Multi-purpose oil lube | 50 Hrs — Intervals in hours at which lubrication is required

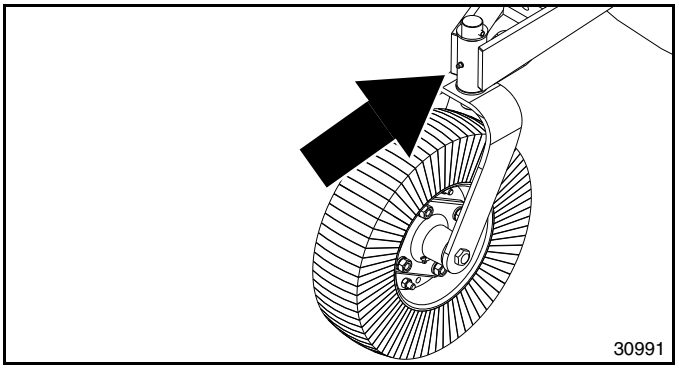

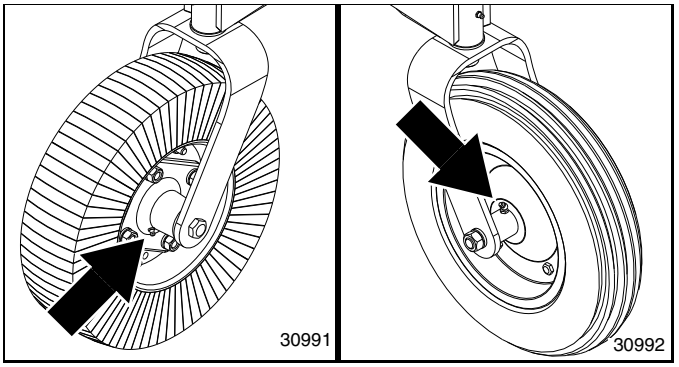

Laminated Tire **Solid Rubber Tire**

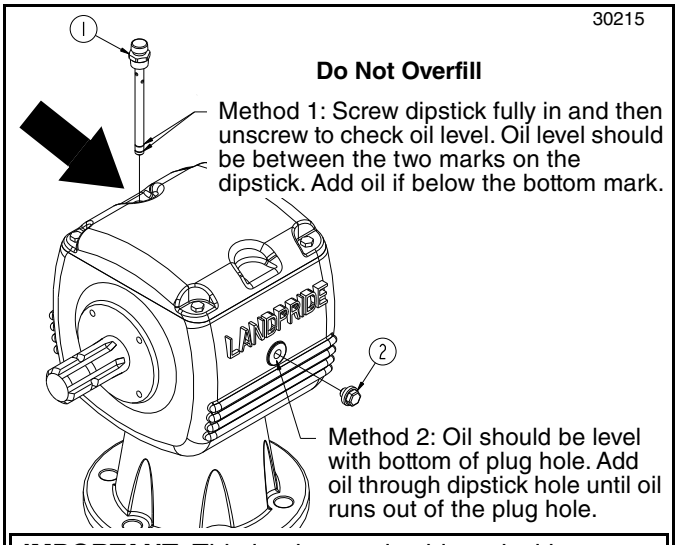

Do Not Overfill

Method 1: Screw dipstick fully in and then unscrew to check oil level. Oil level should be between the two marks on the dipstick. Add oil if below the bottom mark.

Method 2: Oil should be level with bottom of plug hole. Add oil through dipstick hole until oil runs out of the plug hole.

IMPORTANT: This implement is shipped with a vented dipstick packaged in the Operator's Manual bag and should have been installed in the gearbox by your dealer. Please consult your dealer if vented dipstick was not included.

NOTE: Use a suction or siphon pump to drain the gearbox of oil when there is not an oil drain plug.

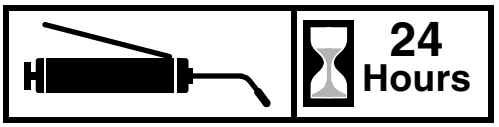

Gauge Wheel Spindle Tube

Type of Lubrication: Grease

Quantity = 6 pumps

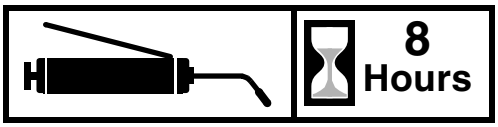

Gauge Wheel Hub

Type of Lubrication: Multi-purpose Grease

Quantity = 2 pumps

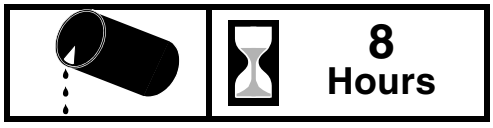

Gearbox

Change oil after the first 50 hours. Thereafter, change oil annually.

NOTE: Do not overfill! Cutter should be level when checking oil. Oil expands when hot, therefore, always check oil level when cold.

Method 1: Unscrew top vented dipstick (#1). Wipe oil from dipstick and screw dipstick in without tightening. Unscrew dipstick and check oil on dipstick. If below bottom level mark, add recommended gear lube through dipstick hole until oil reaches top mark on dipstick. Reinstall vented dipstick and tighten.

Method 2: Remove side oil plug (#2). If oil is below bottom of plug hole, add recommended gear lube through top dipstick hole until oil flows out of side plug hole. Reinstall and tighten side oil plug (#2) and vented dipstick (#1).

Type of Lubrication: 80-90W EP Gear Lube

Quantity = Fill until oil reaches top mark on dipstick or begins to flow out side plug hole in gearbox.

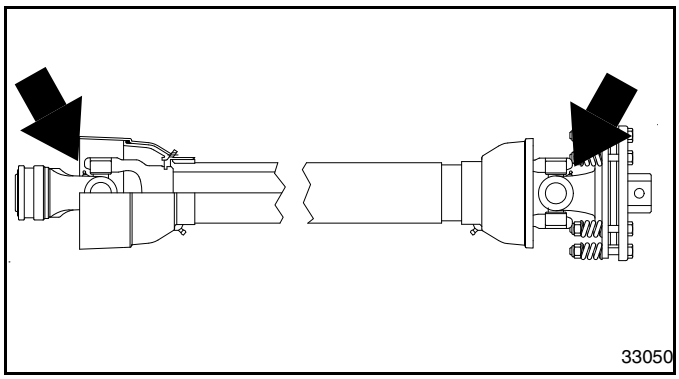

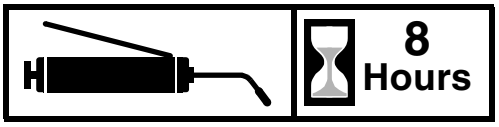

Driveline U-Joints

Type of Lubrication: Grease

Quantity = 6 pumps

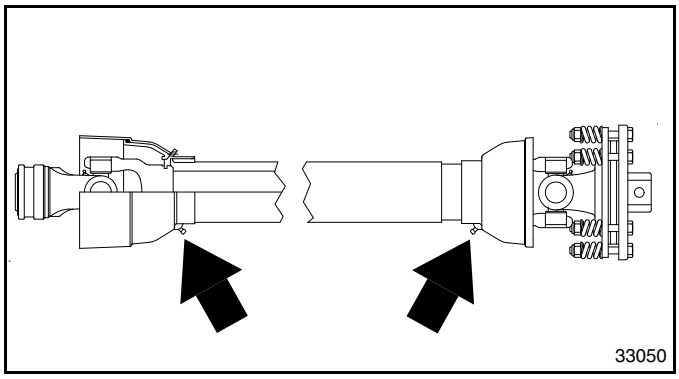

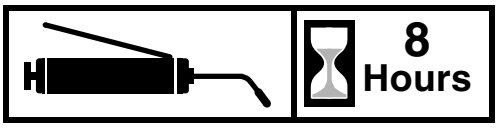

Driveline Shield Bearings

Type of Lubrication: Grease

Quantity = 6 pumps

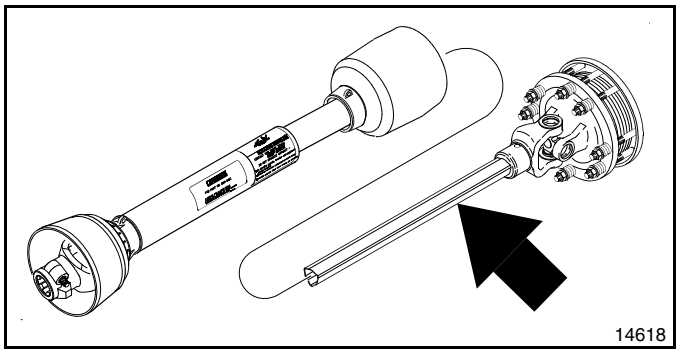

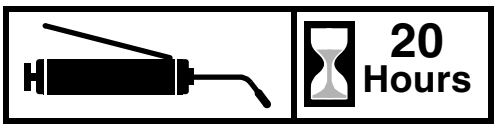

Driveline Profiles

Quantity = Clean & coat inner tube of driveline with a light film of grease and then reassemble.

RCF2060 & RCF2072 Models

Specifications & Capacities		
Model Numbers	**RCF2060**	**RCF2072**
Machine Weight	620 lbs (281.2 kg)	745 lbs (337.9 kg)
	With laminated tailwheel, slip clutch driveline, Front Rubber Guards and Rear Metal Band.	
Hitch	Category I with floating top linkage, Quick Hitch ready	
Cutting Width	60" (1.52 m)	72" (1.83 m)
Overall Width	65" (1.65 m)	77" (1.96 m)
Overall Length	98" (2.49 m)	109 1/2" (2.78 m)
Deck Height (Bottom of Deck to Bottom of Skid Shoe)	9 11/16" (24.6 cm)	11" (27.9 cm)
Cutting Height	1 1/2" to 12" (3.8 cm to 30.5 cm)	
Cutting Capacity	2" (5.1 cm) Diameter	
Recommended Tractor hp	20-65 hp (14.9-48.5 kw)	
Power Take-Off Speed	540 rpm	
Gearbox Ratio	1:1.93	1:1.47
Gearbox Construction	Speed-up beveled gears, cast iron housing, 1 3/8" (3.5 cm) - 6 spline input shaft and 2" (5.1 cm) output shaft	
Gearbox Lubricant	EP 80-90W oil	
Gearbox oil Capacity	4.5 Pints (2.13 L)	4 Pints (1.89 L)
Deck Construction	All welded deck	
Deck Material Thickness	10 Gauge (.134")(3.4 mm)	
Side Skirt Material Thickness	10 Gauge (.134")(3.4 mm)	
Skid Shoes **Standard** **Accessory**	Full length weld-on skid shoes 1/4" x 2 1/2" x 18 7/16" (6 mm x 6.4 cm x 46.8 cm) Long bolt-on replaceable skid shoes (Bolts to weld-on skid shoes)	
Stump Jumper	10 GA. x 24" (3.4 mm x 61.0 cm) Round Pan with 1" (2.5 cm) thick blade holder bar	
Blades (2)	1/2" x 3" x 25" (13 mm x 7.6 cm x 63.5 cm) Heat treated alloy steel free-swinging high lift	1/2" x 3" x 31" (13 mm x 7.6 cm 78.7 cm) Heat treated alloy steel free-swinging high lift
Blade Bolts	Keyed with harden flat washers & locknuts.	
Blade Tip Speed	16,363 FPM (83.1 mps)	14,955 FPM (76.0 mps)
Driveline	ASAE Category 3	
Driveline Protection **Optional** **Optional**	shear bolt protection 2 Plate slip clutch	
Tailwheel Mount	Welded A-arm and caster fork with 360 degree swivel	
Tailwheel **Optional** **Optional**	4" x 8" x 15" Laminated tire with cast iron hub 4" x 16" Molded rubber tire	
Front Guard **Optional** **Optional**	Rubber Belting Single Chain Guard	
Rear Guard **Standard** **Optional** **Optional**	Metal Band Rubber Belting Single Chain Guard	

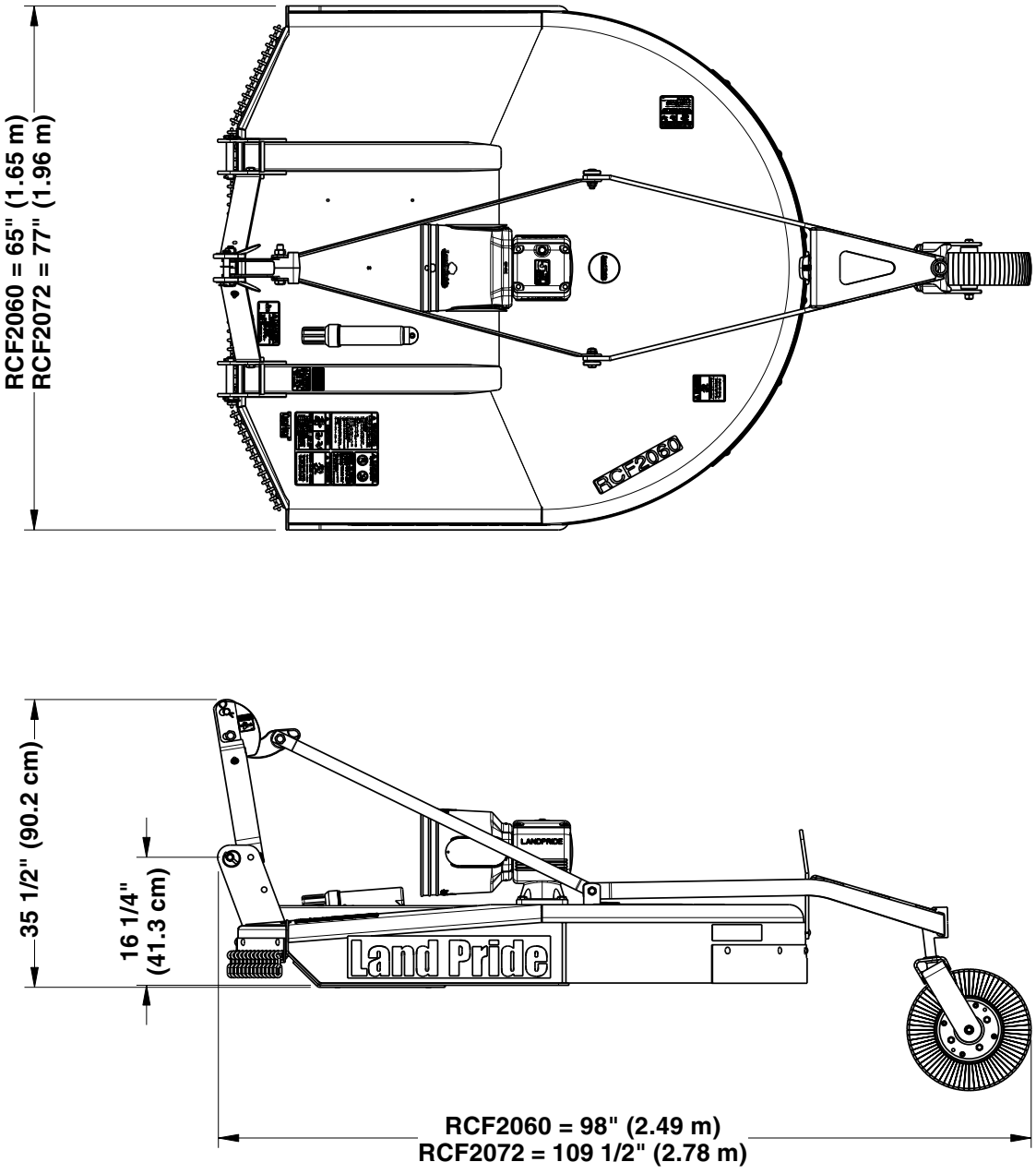
RCF2060 = 65" (1.65 m)
RCF2072 = 77" (1.96 m)
RCF2060
35 1/2" (90.2 cm)
16 1/4"
(41.3 cm)
Land Pride
RCF2060 = 98" (2.49 m)
RCF2072 = 109 1/2" (2.78 m)

30997

RCF2060 & RCF2072 Models

Features	Benefits
Surpassed rugged industry standards	All Land Pride Cutters have been designed and tested and meet rigorous voluntary testing procedures specified by ANSI.
10 Year limited gearbox warranty	Quality and dependability to handle tough mowing applications. Demonstrates Land Pride's confidence in the integrity of our gearboxes.
Gearbox Seal Protection	Gearbox bottom seal protection for longer bearing life.
Cat. 3 driveline with shear-bolt Option	Shear-bolt offers maximum driveline protection.
Cat. 3 driveline with 2-plate slip-clutch Option	Slip-clutch driveline offers convenience for continual work.
Dual position clevis type 3-point floating top link	Permits deck to follow the terrain for an even cut.
Lower clevis type 3-point hitch	Allows for ease of hook-up to tractor. Also adds additional strength allowing for an even pull from the tractor's lower arms, vs. pulling on a single pin design.
Heavy 10 gauge deck & side skirt construction	Can withstand more abuse than lighter gauge decks.
Box tubing deck supports	Makes for a stronger rigid deck.
Fully welded deck	Adds additional strength.
Extended cutter front	For increased material flow and added protection.
Round back design	Helps discharge grass better than enclosed or partially enclosed cutters.
Deck Height	9 11/16" Deck height on 60" and 11" deck height on 72" model Allows cutter to handle heavy cutting conditions.
1 1/2" to 12" (3.8 to 30.5 cm) Cutting height	Provides for a wide range of cutting conditions.
Full length skid shoes	Provides sidewall reinforcement and full protection to bottom of sidewall.
1/2" x 3" (1.3 x 7.6 cm) Heat-treated free swinging blades	Free swinging protects from obstructions. Heat-treated offers longer life.
Splined blade bar hub	Allows for tight positive fit of stump jumper and blade bar to gearbox output shaft.
10 Gauge stump jumper	Standard round stump jumper slides over stumps, rocks, and debris.
High blade tip speed	Ensures clean cut.
15" Laminated tailwheel	Laminated material is long lasting in rough conditions. Can't go flat.
4" x 16" Solid rubber tailwheel	Can't go flat.
1 1/4" Heavy-duty spindle on tailwheel	Tailwheels take a beating, spindle gives the strength to protect tailwheel assembly.
Optional Guarding	Protect against flying debris. Customer can choose to include single chain or rubber guarding on the front and back. Rear Metal Band standard on the back.
Driveline Holder	Keeps driveline up out of dirt. Easier hook up of driveline.

Troubleshooting Chart

Problem	Cause	Solution
Oil seal leaking	Gearbox overfilled	Drain to side plug hole
	Seals damaged	Replace seals
	Grass or wire wrapped on shaft in seal area	Check seal areas daily
Driveline yoke or cross failing	Shock load	Avoid hitting solid objects
	Needs lubrication	Lubricate every 8 hours
Driveline clutch is slipping	Scalping the ground	Raise cutting height
	Cutting too fast	Reduce travel speed
	Power take-off being engaged too fast at high engine rpm	Slowly engage power take-off at low engine rpm
	Cutting over solid objects	Avoid solid objects
Bent Driveline (NOTE: driveline should be repaired or replaced if bent)	Contacting frame	Reduce lift height in transport position
	Contacting drawbar	Reposition drawbar
	Bottoming out	Shorten driveline
	Binding up	Not lubricating enough
Driveline telescoping tube failing	Shock load	Avoid hitting solid objects
Driveline telescoping tube wearing	Needs lubrication	Lubricate every 20 hours
Blades Lock-up	Tractor has instant on power take-off	Engage power take-off at low rpms and then slowly increase engine speed to full power take-off speed. See Blade Engagement on page 26.
	Tractor has Instant off power take-off	Decrease engine speed slowly to an idle and then disengage power take-off. See Blade Disengagement on page 26.
Blades wearing excessively	Cutting on sandy ground	Raise cutting height.
	Contacting ground frequently	Raise cutting height.
	Power take-off speed too high	Maintain power take-off speed by slowing down.
Blades breaking	Hitting solid objects	Avoid hitting solid objects
Blades coming loose	Blades not tightened properly	Tighten blade hardware (refer to **"Cutter Blade Maintenance"** on page 28
	Improper deck attitude	Lower front of deck, see page 23
Blade carrier becomes loose	Running loose in the past	Replace gearbox output shaft and blade carrier
	Blade carrier hardware not tight enough	Tighten to specified torque
Blade bolt holes worn	Blade hardware running loose	Replace blades and blade bolts if worn
Blade carrier bent	Hitting solid objects	Avoid hitting solid objects and replace blade carrier
Excessive side skid wear	Cutting height not level	Adjust cutter height
	Soil abrasive	Adjust cutter height
	Cutting too low	Adjust cutter height
Tailwheel support failing	Lowering too fast	Adjust rate of drop
	Hitting objects when turning	Reduce speed on turns
Excessive vibration	Driveline bent	Replace driveline
	Blades loose	Tighten blade bolts
	Blade carrier bent	Replace blade carrier
	Blade broken	Replace blade
	Blade will not swing	Remove and inspect blade
	Blades have unequal weight	Replace both blades

Torque Values Chart for Common Bolt Sizes

Bolt Size (inches)	Bolt Head Identification Grade 2		Grade 5		Grade 8	
in-tpi [1]	N · m [2]	ft-lb [3]	N · m	ft-lb	N · m	ft-lb
1/4" - 20	7.4	5.6	11	8	16	12
1/4" - 28	8.5	6	13	10	18	14
5/16" - 18	15	11	24	17	33	25
5/16" - 24	17	13	26	19	37	27
3/8" - 16	27	20	42	31	59	44
3/8" - 24	31	22	47	35	67	49
7/16" - 14	43	32	67	49	95	70
7/16" - 20	49	36	75	55	105	78
1/2" - 13	66	49	105	76	145	105
1/2" - 20	75	55	115	85	165	120
9/16" - 12	95	70	150	110	210	155
9/16" - 18	105	79	165	120	235	170
5/8" - 11	130	97	205	150	285	210
5/8" - 18	150	110	230	170	325	240
3/4" - 10	235	170	360	265	510	375
3/4" - 16	260	190	405	295	570	420
7/8" - 9	225	165	585	430	820	605
7/8" - 14	250	185	640	475	905	670
1" - 8	340	250	875	645	1230	910
1" - 12	370	275	955	705	1350	995
1-1/8" - 7	480	355	1080	795	1750	1290
1-1/8" - 12	540	395	1210	890	1960	1440
1-1/4" - 7	680	500	1520	1120	2460	1820
1-1/4" - 12	750	555	1680	1240	2730	2010
1-3/8" - 6	890	655	1990	1470	3230	2380
1-3/8" - 12	1010	745	2270	1670	3680	2710
1-1/2" - 6	1180	870	2640	1950	4290	3160
1-1/2" - 12	1330	980	2970	2190	4820	3560

Bolt Size (Metric)	Bolt Head Identification 5.8 Class 5.8		8.8 Class 8.8		10.9 Class 10.9	
mm x pitch [4]	N · m	ft-lb	N · m	ft-lb	N · m	ft-lb
M 5 X 0.8	4	3	6	5	9	7
M 6 X 1	7	5	11	8	15	11
M 8 X 1.25	17	12	26	19	36	27
M 8 X 1	18	13	28	21	39	29
M10 X 1.5	33	24	52	38	72	53
M10 X 1.25	35	26	53	39	76	56
M12 X 1.75	58	42	91	67	125	93
M12 X 1.5	60	44	95	70	130	97
M12 X 1	90	66	105	77	145	105
M14 X 2	92	68	145	105	200	150
M14 X 1.5	99	73	155	115	215	160
M16 X 2	145	105	225	165	315	230
M16 X 1.5	155	115	240	180	335	245
M18 X 2.5	195	145	310	230	405	300
M18 X 1.5	220	165	350	260	485	355
M20 X 2.5	280	205	440	325	610	450
M20 X 1.5	310	230	650	480	900	665
M24 X 3	480	355	760	560	1050	780
M24 X 2	525	390	830	610	1150	845
M30 X 3.5	960	705	1510	1120	2100	1550
M30 X 2	1060	785	1680	1240	2320	1710
M36 X 3.5	1730	1270	2650	1950	3660	2700
M36 X 2	1880	1380	2960	2190	4100	3220

[1] in-tpi = nominal thread diameter in inches-threads per inch

[2] N· m = newton-meters

[3] ft-lb= foot pounds

[4] mm x pitch = nominal thread diameter in millimeters x thread pitch

Torque tolerance + 0%, -15% of torquing values. Unless otherwise specified use torque values listed above.
All locknuts or lubricated fasteners: Use 75% of torque value. (i.e. 1/2"-13 GR5 = 76 ft-lb; 75% of 76 or .75 x 76 = 57 ft-lb).

Additional Torque Values

Blade Carrier Hub Nut	450 ft-lbs (610 Nm) Minimum
Blade Bolt Locknut	450 ft-lbs (610 Nm)

Warranty

Land Pride warrants to the original purchaser that this Land Pride product will be free from defects in material and workmanship beginning on the date of purchase by the end user according to the following schedule when used as intended and under normal service and conditions for personal use.

Overall Unit and Driveline: One year Parts and Labor

Gearbox: S/N 2354203+ or retailed and warranty registered after 2/1/25
10 Years Limited: 6 years Full Warranty, Parts and Labor
Years 7, 8, 9, and 10 covers Parts Only including seals

Blades, tires and driveline friction discs: Considered wear items

This Warranty is limited to the repair or replacement of any defective part by Land Pride and the installation by the dealer of any such replacement part, and does not cover common wear items. Land Pride reserves the right to inspect any equipment or parts which are claimed to have been defective in material or workmanship.

This Warranty does not apply to any part or product which in Land Pride's judgment shall have been misused or damaged by accident or lack of normal maintenance or care, or which has been repaired or altered in a way which adversely affects its performance or reliability, or which has been used for a purpose for which the product is not designed. Misuse also specifically includes failure to properly maintain oil levels, grease points, and driveline shafts.

Claims under this Warranty should be made to the dealer which originally sold the product and all warranty adjustments must be made through an authorized Land Pride dealer. Land Pride reserves the right to make changes in materials or design of the product at any time without notice.

This Warranty shall not be interpreted to render Land Pride liable for damages of any kind, direct, consequential, or contingent to property. Furthermore, Land Pride shall not be liable for damages resulting from any cause beyond its reasonable control. This Warranty does not extend to loss of crops, any expense or loss for labor, supplies, rental machinery or for any other reason.

No other warranty of any kind whatsoever, express or implied, is made with respect to this sale; and all implied warranties of merchantability and fitness for a particular purpose which exceed the obligations set forth in this written warranty are hereby disclaimed and excluded from this sale.

This Warranty is not valid unless the unit is registered with Land Pride within 30 days from the date of original purchase.

IMPORTANT: The Online Warranty Registration should be completed by the dealer at the time of purchase. This information is necessary to provide you with quality customer service.

Model Number _____ **Serial Number** _____



Corporate Office: P.O. Box 5060
Salina, Kansas 67402-5060 USA
www.landpride.com