Table of Contents

Rotary Cutters

RCR2510

22288

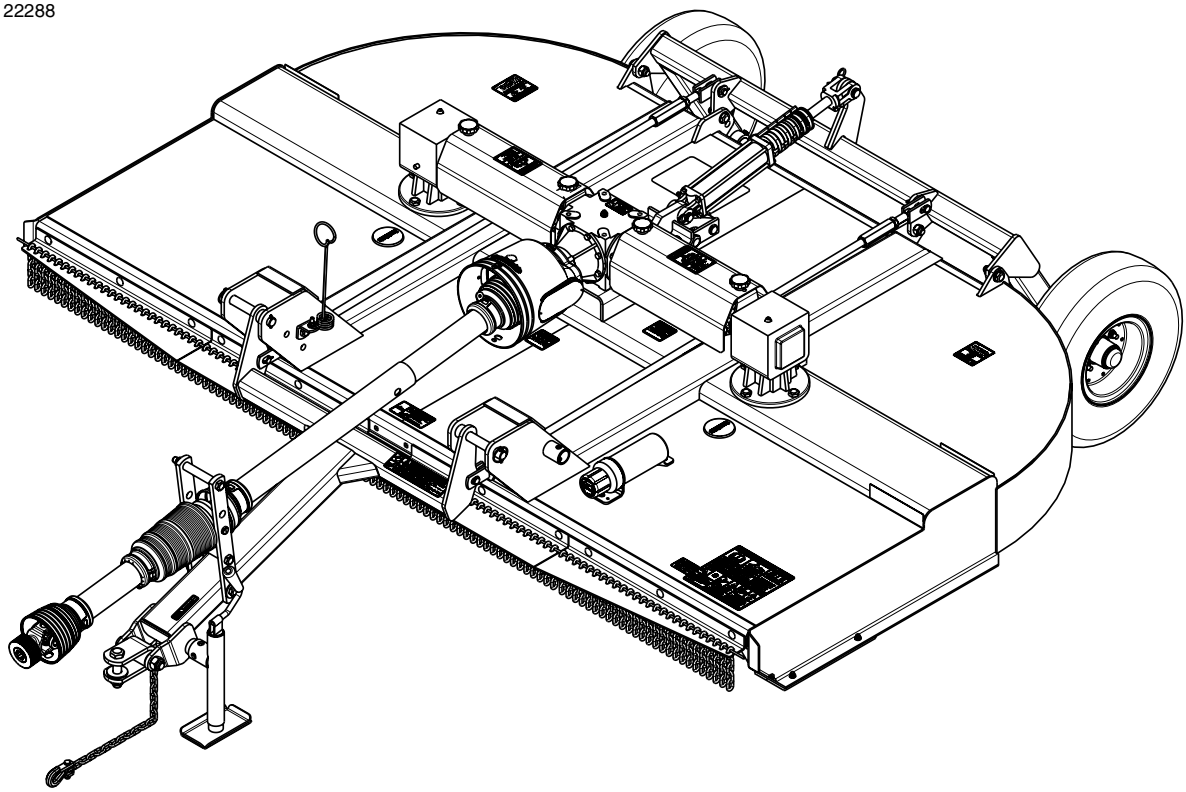

312-753M
Operator's Manual

Read the Operator's Manual entirely. When you see this symbol, the subsequent instructions and warnings are serious - follow without exception. Your life and the lives of others depend on it!

Cover photo may show optional equipment not supplied with standard unit.

For an Operator's Manual and Decal Kit in French Language, please see your Land Pride dealer.

Printed 9/2/26

Machine Identification

Record your machine details in the log below. If you replace this manual, be sure to transfer this information to the new manual.

If you, or the dealer, have added Options not originally ordered with the machine, or removed Options that were originally ordered, the weights and measurements are no longer accurate for your machine. Update the record by adding the machine weight and measurements provided in the Specifications & Capacities Section of this manual with the Option(s) weight and measurements.

Model Number	
Serial Number	
Machine Height	
Machine Length	
Machine Width	
Machine Weight	
Delivery Date	
First Operation	
Accessories	_____ _____ _____

Dealer Contact Information

Name: _____

Street: _____

City/State: _____

Telephone: _____

Email: _____

California Proposition 65

⚠WARNING: Handling passenger or off-highway motor vehicle parts can expose you to chemicals such as phthalates and lead, which can cause cancer and reproductive harm. To minimize exposure, service the vehicle in a well-ventilated area, wear gloves, and wash your hands. For more information see www.P65Warnings.ca.gov/motor-vehicle-parts.

New Mexico PFAS



Important Safety Information 1
Safety at All Times 1
Look for the Safety Alert Symbol 1
Be Aware of Signal Words 1
Be Aware of Special Notices 1
Safety Labels 6
Introduction 13
Application 13
Using This Manual 13
Owner Assistance 13
Serial Number 13
Section 1: Assembly & Set-up 14
Tractor Requirements 14
Pull-Type Hitch 14
3-Point Hitch 14
Dealer Preparations 14
Gearbox Vent Plugs & Dipsticks 15
Vent Plug Installation 15
Torque Requirements 15
Tractor Shutdown Procedure 15
Pull-Type Cutter 16
Hitch Assembly 16
Equal Angle Driveline Installation 17
Constant Velocity Driveline Installation 18
Pull-Type Hook-Up 19
Safety Chain 19
3-Point Lift-Type Cutter 20
Hitch Assembly 20
Driveline Installation 21
3-Point Hook-Up 22
Driveline Hook-up 23
Check Driveline Collapsible Length 24
Check Driveline Interference 25
Check Chains (Accessory) 25
Section 2: Assembly of Optional Equipment 26
Chain Safety Guards (Optional) 26
Rubber Safety Guards (Optional) 27
Section 3: Adjustments 28
Pull-Type Leveling & Cutting Height 28
Deck Leveling From Front to Back 28
Pull-Type Cutting Height 28
3-Point Leveling & Cutting Height 29
Deck Leveling From Left to Right 29
Deck Leveling From Front to Rear 29
Center Link Adjustment 29
Tailwheel Height Adjustment 30
Section 4: Operating Procedures 31
Operating Checklist 31
Safety Information 31
Inspection of Tractor & Cutter 32
Transporting 33
Blade Engagement & Disengagement 33
Blade Engagement 33
Blade Disengagement 33
Field Operation 34
Turning Angles for Pull-Type Cutters 34
Crossing Steep Ditches & Banks 35
Unhook 3-Point Cutter 35
Unhook Pull-Type Cutter 35
General Operating Instructions 36
Section 5: Maintenance & Lubrication 37
Maintenance 37
Hydraulic System 37
Cutter Blade Maintenance 37
Driveline Maintenance 39
Slip-Clutch Run-in Intervals 39
Slip-Clutch Identification 39
Slip-Clutch With Coil Springs 40
Slip-Clutch Run-in With Coil Springs 40
Slip-Clutch Breakdown With Coil Springs 40
Clutch Disassembly 40
Clutch Inspection 40
Clutch Assembly 40
Adjust Coil Spring Height 41
Coil Spring Height Gauge 41
Slip-Clutch With Belleville Spring 42
Slip-Clutch Run-in With Belleville Spring 42
Slip-Clutch Breakdown With Belleville Spring . . 42
Clutch Disassembly 42
Clutch Inspection 42
Clutch Assembly 43
Adjust Belleville Spring Gap 43
Adjustment Method #1 43
Adjustment Method #1 43
RCR2510 Dual End Flex Couplers 44
Skid Shoe Maintenance 44
Tires 45
Long-Term Storage 46
Ordering Replacement Parts 46

Continue Table of Contents on next page

Please take our Customer Satisfaction SURVEY at landpride.com

© Copyright 2026 All rights Reserved

Land Pride provides this publication "as is" without warranty of any kind, either expressed or implied. While every precaution has been taken in the preparation of this manual, Land Pride assumes no responsibility for errors or omissions. Neither is any liability assumed for damages resulting from the use of the information contained herein. Land Pride reserves the right to revise and improve its products as it sees fit. This publication describes the state of this product at the time of its publication, and may not reflect the product in the future.

Land Pride is a registered trademark.

All other brands and product names are trademarks or registered trademarks of their respective holders.

Printed in the United States of America.

Lubrication Points 47
3-Point Tailwheel Spindle Tube 47
Tailwheel Hub 47
Pillow Block Bearing (Pull-Type Cutter) 47
Ratchet Jack 47
Gearbox 48
T-Gearbox 48
Dual End Flex Coupler 48
Driveline U-Joints 49
CV Driveline U-Joints & Profile Shields 49
Driveline Profiles With Grease Zerk 49
Driveline Profiles Without Grease Zerk 49

Section 6: Specifications & Capacities 50
Section 7: Features and Benefits 53
Section 8: Troubleshooting 54
Section 9: Torque & Tire Inflation Charts . . 56
Section 10: Warranty 57

Parts Manual QR Locator

The QR (Quick Reference) code on the left will take you to the Parts Manual for this equipment. Download the appropriate App on your smart phone, open the App, point your phone on the QR code and take a picture.

Dealer QR Locator

The QR code on the left will link you to available dealers for Land Pride products. Refer to Parts Manual QR Locator on this page for detailed instructions.

Listed below are common practices that may or may not be applicable to the products described in this manual.

Safety at All Times

Careful operation is your best assurance against an accident.

All operators, no matter how much experience they may have, should carefully read this manual and other related manuals before operating the power machine and this implement.

- ▲ Thoroughly read and understand the "Safety Label" section. Read all instructions noted on them.
- ▲ Do not operate the equipment while under the influence of drugs or alcohol, as they impair your ability to safely and properly operate the equipment.
- ▲ The operator should be familiar with all functions of the tractor and attached implement, and be able to handle emergencies quickly.
- ▲ Make sure all guards and shields appropriate for the operation are in place and secured before operating the implement.
- ▲ Keep all bystanders away from equipment and work area.
- ▲ Start tractor from the driver's seat with hydraulic controls in neutral.
- ▲ Operate tractor and controls from the driver's seat only.
- ▲ Never dismount from a moving tractor or leave tractor unattended with engine running.
- ▲ Do not allow anyone to stand between the implement and tractor while backing up to the implement.
- ▲ Keep hands, feet, and clothing away from power-driven parts.
- ▲ While transporting and operating equipment, watch out for objects overhead and along the sides such as fences, trees, buildings, wires, etc.
- ▲ Do not turn tractor so tight as to cause hitched implement to ride up on the tractor's rear wheel.
- ▲ Store implement in a safe and secure area where children normally do not play. When needed, secure implement against falling with support blocks.



Look for the Safety Alert Symbol

The SAFETY ALERT SYMBOL indicates there is a potential hazard to personal safety and extra precaution must be taken. When you see this symbol, be alert and carefully read the message that follows it. Hazard control, and accident prevention are dependent upon the awareness, concern, prudence, and proper training of personnel involved in the operation, transport, maintenance, and storage of equipment.

Be Aware of Signal Words

A signal word designates a degree or level of hazard seriousness. They are:

DANGER: Indicates a hazardous situation that, if not avoided, will result in death or serious injury.

WARNING: Indicates a hazardous situation that, if not avoided, could result in death or serious injury.

CAUTION: Indicates a hazardous situation that, if not avoided, may result in minor or moderate injury.

Be Aware of Special Notices

Special notices are intended to point out important and helpful information that should be followed. They are usually placed inside a box. They are:

IMPORTANT: Indicates that equipment or property damage could result if instructions are not followed.

NOTE: Indicates supplementary explanations that will be helpful when using the equipment.

Safety Precautions for Children

Tragedy can occur if the operator is not alert to the presence of children, Children generally are attracted to implements and their work.

- ▲ Never assume children will remain where you last saw them.
- ▲ Keep children out of the work area and under the watchful eye of a responsible adult.
- ▲ Be alert and shut the implement and tractor down if children enter the work area.
- ▲ Never carry children on the tractor or implement. There is not a safe place for them to ride. They may fall off and be run over or interfere with the control of the power machine.
- ▲ Never allow children to operate the power machine, even under adult supervision.
- ▲ Never allow children to play on the power machine or implement.
- ▲ Use extra caution when backing up. Before the tractor starts to move, look down and behind to make sure the area is clear.

Tractor Shutdown & Storage

- ▲ If engaged, disengage power take-off.
- ▲ Park on solid, level ground and lower implement to ground or onto support blocks.
- ▲ Put tractor in park or set park brake.
- ▲ Turn off engine and remove ignition key to prevent unauthorized starting.
- ▲ Relieve all hydraulic pressure to auxiliary hydraulic lines.
- ▲ Wait for all components to stop before leaving operator's seat.
- ▲ Use steps, grab-handles and anti-slip surfaces when stepping on and off the tractor.

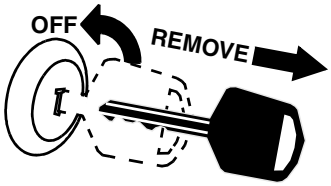

Listed below are common practices that may or may not be applicable to the products described in this manual.

Use A Safety Chain

- ▲ A safety chain will help control drawn machinery should it separate from the tractor drawbar.
- ▲ Use a chain with the strength rating equal to or greater than the gross weight of the towed implement.
- ▲ Attach the chain to the tractor drawbar support or other specified anchor location. Allow only enough slack in the chain to permit turning.
- ▲ Always hitch the implement to the machine towing it. Do not use the safety chain to tow the implement.

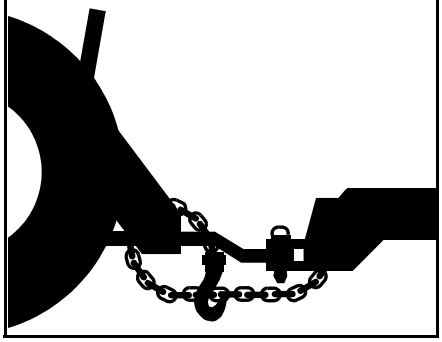

Towing Safely

- ▲ Comply with federal, state, and local laws.
- ▲ Use towing vehicle and trailer of adequate size and capacity. Secure equipment towed on a trailer with chocks, tie downs, and chains.
- ▲ **IMPORTANT:** Do not tow a load that is more than double the weight of the vehicle towing the load.
- ▲ Sudden braking can cause a towed trailer to swerve unexpectedly. Reduce speed if trailer is not equipped with brakes.



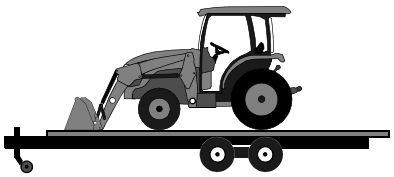

Transport Safely

- ▲ Comply with federal, state, and local laws.
- ▲ Avoid contact with any overhead utility lines or electrically charged conductors.
- ▲ Engage park brake when stopped on an incline.
- ▲ Maximum transport speed for an implement is 20 mph (32 km/h). DO NOT EXCEED.
- ▲ Never travel at a speed which does not allow adequate control of steering and stopping. Some rough terrains require a slower speed. Sudden braking can cause a towed load to swerve and upset.
- ▲ Do not tow an implement that, when fully loaded, weights more than 1.5 times the weight of towing vehicle.

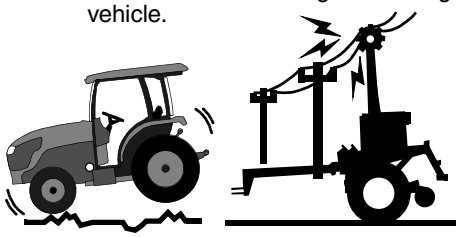

Tire Safety



- ▲ Tire changing can be dangerous and must be performed by trained personnel using the correct tools and equipment.
- ▲ Always properly match the wheel size to the properly sized tire.
- ▲ Always maintain correct tire pressure. Do not inflate tires above recommended pressures shown in the Operator's Manual.
- ▲ When inflating tires, use a clip-on chuck and extension hose long enough to allow you to stand to one side and NOT in front of or over the tire assembly. Use a safety cage if available.
- ▲ Securely support the implement when changing a wheel.
- ▲ When removing and installing wheels, use wheel handling equipment adequate for the weight involved.
- ▲ Make sure wheel bolts have been tightened to the specified torque.

Practice Safe Maintenance

- ▲ Understand procedure before doing work. Refer to the Operator's Manual for additional information.
- ▲ Work on a level surface in a clean, dry area that is well-lit.
- ▲ Lower implement to the ground and follow all shutdown procedures before leaving the operator's seat to perform maintenance.
- ▲ Do not work under any hydraulically supported equipment. It can settle, suddenly leak down, or be lowered accidentally. If it is necessary to work under the equipment, securely support it with stands or suitable blocking beforehand.
- ▲ Use properly grounded electrical outlets and tools.
- ▲ Use correct tools and equipment for the job that are in good condition.
- ▲ Allow equipment to cool before working on it.
- ▲ Disconnect battery ground cable (-) before servicing or adjusting electrical systems or before welding on implement.
- ▲ Inspect all parts. Make certain parts are in good condition & installed properly.
- ▲ Replace parts on this implement with genuine Land Pride parts only. Do not alter this implement in a way which will adversely affect its performance.
- ▲ Do not grease or oil implement while it is in operation.
- ▲ Remove buildup of grease, oil, or debris.
- ▲ Always make sure any material and waste products from the repair and maintenance of the implement are properly collected and disposed of.
- ▲ Remove all tools and unused parts from equipment before operation.
- ▲ Do not weld or torch on galvanized metal as it will release toxic fumes.









Listed below are common practices that may or may not be applicable to the products described in this manual.

Prepare for Emergencies

- ▲ Be prepared if a fire starts.
- ▲ Keep a first aid kit and fire extinguisher handy.
- ▲ Keep emergency numbers for doctor, ambulance, hospital, and fire department near the phone.

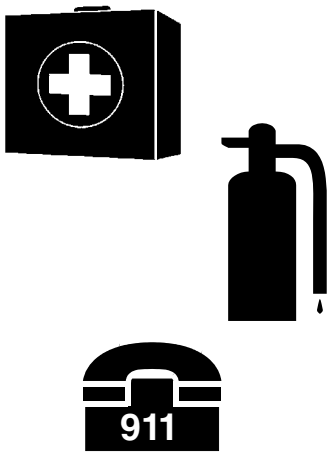

Wear Personal Protective Equipment (PPE)

- ▲ Wear protective clothing and equipment appropriate for the job such as safety shoes, safety, glasses, hard hat, dust mask, and ear plugs.
- ▲ Clothing should fit snug without fringes and pull strings to avoid entanglement with moving parts.
- ▲ Prolonged exposure to loud noise can cause hearing impairment or hearing loss. Wear suitable hearing protection such as earmuffs or earplugs.
- ▲ Operating a machine safely requires the operator's full attention. Avoid wearing headphones while operating equipment.



Avoid High Pressure Fluids



- ▲ Escaping fluid under pressure will penetrate the skin or eyes causing serious injury.
- ▲ Relieve all residual pressure before disconnecting hydraulic lines or performing work on the hydraulic system.
- ▲ Make sure all hydraulic fluid connections are properly tightened/torqued and all hydraulic hoses and lines are in good condition before applying pressure to the system.
- ▲ Use a piece of paper or cardboard, NOT BODY PARTS, to check for suspected leaks.
- ▲ Wear protective gloves and safety glasses or goggles when working with hydraulic systems.
- ▲ **DO NOT DELAY.** If an accident occurs, seek immediate emergency medical care or gangrene may result.

Use Safety Lights and Devices

- ▲ A slow moving power machine can create a hazard when driven on public roads. They are difficult to see, especially at night.
- ▲ Flashing warning lights and turn signals are recommended whenever driving on public roads.
- ▲ For tractors and other agriculture equipment, a Slow Moving Vehicle (SMV) sign is required when traveling on public roads.

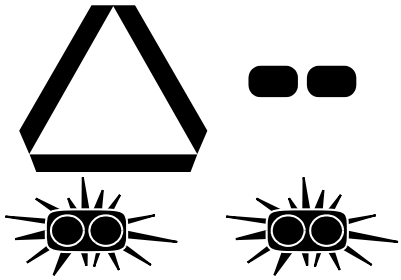

Use Seat Belt and ROPS

- ▲ Land Pride recommends the use of a CAB or roll-over-protective-structures (ROPS) and seat belt in almost all power machines. Combination of a CAB or ROPS and seat belt will reduce the risk of serious injury or death if the power machine should be upset.
- ▲ If ROPS is in the locked-up position, fasten seat belt snugly and securely to help protect the operator against serious injury or death from falling and/or machine overturn.



Keep Riders Off Machinery

- ▲ Never carry riders on the tractor or implement.
- ▲ Riders obstruct operator's view and interfere with the control of the power machine.
- ▲ Riders can be struck by objects or thrown from the equipment.
- ▲ Never use the tractor or implement to lift or transport riders.

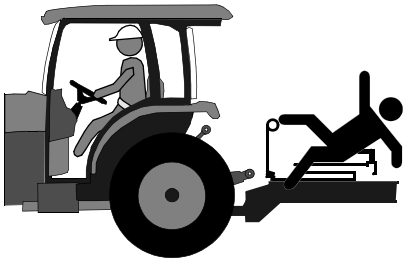

Listed below are common practices that may or may not be applicable to the products described in this manual.

Avoid Crystalline Silica (Quartz) Dust

Because crystalline silica is a basic component of sand and granite, many activities at construction sites produce dust containing crystalline silica. Trenching, sawing, and boring of material containing crystalline silica can produce dust containing crystalline silica particles. This dust can cause serious injury to the lungs (silicosis).

There are guidelines which should be followed if crystalline silica (quartz) is present in the dust.

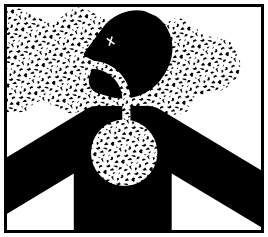

- ▲ Be aware of and follow OSHA (or other local, State, or Federal) guidelines for exposure to airborne crystalline silica.
- ▲ Know the work operations where exposure to crystalline silica may occur.
- ▲ Participate in air monitoring or training programs offered by the employer.
- ▲ Be aware of and use optional equipment controls such as water sprays, local exhaust ventilation, and enclosed cabs with positive pressure air conditioning if the machine has such equipment. Otherwise respirators shall be worn.
- ▲ Where respirators are required, wear a respirator approved for protection against crystalline silica containing dust. Do not alter respirator in any way. Workers who use tight-fitting respirators can not have beards/ mustaches which interfere with the respirator seal to the face.
- ▲ If possible, change into disposable or washable work clothes at the work site; shower and change into clean clothing before leaving the work site.
- ▲ Do not eat, drink, use tobacco products, or apply cosmetics in areas where there is dust containing crystalline silica.
- ▲ Store food, drink, and personal belongings away from the work area.
- ▲ Wash hands and face before eating, drinking, smoking, or applying cosmetics after leaving the exposure area.

Handle Chemicals Properly

- ▲ Protective clothing should be worn.
- ▲ Handle all chemicals with care.
- ▲ Follow instructions on container label.
- ▲ Agricultural chemicals can be dangerous. Improper use can seriously injure persons, animals, plants, soil, and property.
- ▲ Inhaling smoke from any type of chemical fire can be a serious health hazard.
- ▲ Store or dispose of unused chemicals as specified by the chemical manufacturer.



Dig Safe - Avoid Underground Utilities

- ▲ USA: Call 811
  CAN:
  http://www.clickbeforeyoudig.com
- ▲ Always contact your local utility companies (electrical, telephone, gas, water, sewer, and others) before digging so that they may mark the location of any underground services in the area.
- ▲ Be sure to ask how close you can work to the marks they positioned.



This page left blank intentionally.

Safety Labels

Your Rotary Cutter comes equipped with all safety labels in place. They are designed to help you safely operate your implement. Read and follow their directions.

1. *Keep all safety labels clean and legible.*
2. *Refer to this section for proper label placement. Replace all damaged or missing labels. Order new labels from your nearest Land Pride dealer. To find your nearest dealer, visit our dealer locator at www.landpride.com.*
3. *Some new equipment installed during repair requires safety labels to be affixed to the replaced component as specified by Land Pride. When ordering new components make sure the correct safety labels are included in the request.*
4. *Refer to this section for proper label placement.*
   To install new labels:
   a. *Clean surface area where label is to be placed.*
   b. *Spray soapy water onto the cleaned area.*
   c. *Peel backing from label and press label firmly onto the surface.*
   d. *Squeeze out air bubbles with edge of a credit card or a similar type of straight edge.*

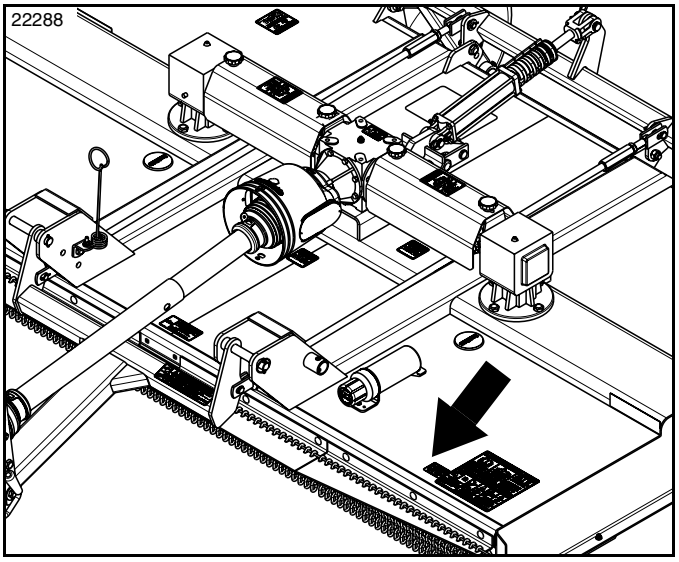



818-130C

Warning: Operate with 540 rpm Power Take-off Speed

1 Place: On the front left corner of deck

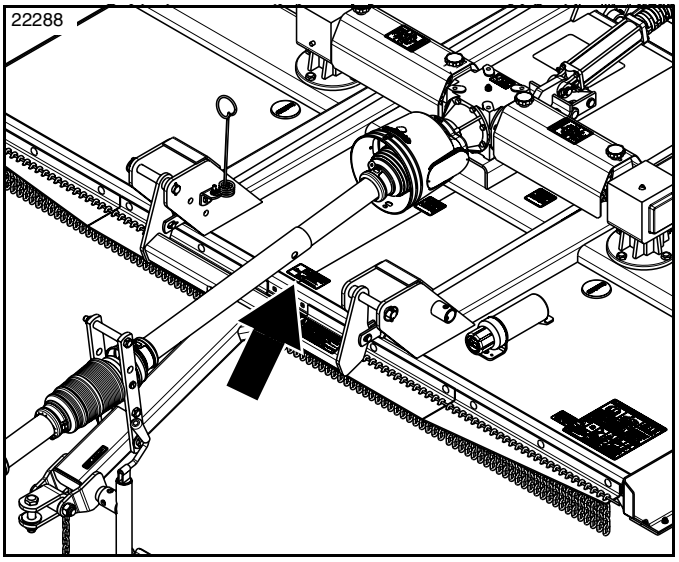



818-142C

Danger: Rotating Driveline Entanglement Hazard

1 Place: On the front left corner of the deck



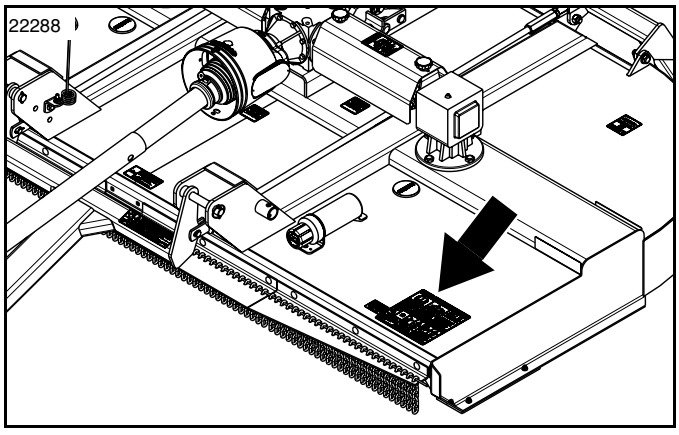

844-190C

Danger/Warning Safety Combo: List of Safety Hazards

1 Place: On the front top left corner of the deck

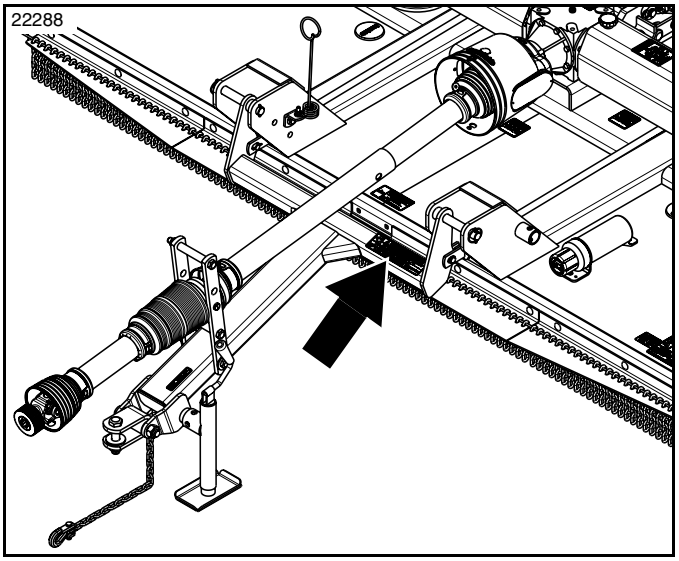



70245

838-094C

Warning: High Pressure Fluid Hazard

1 Place: On the tongue

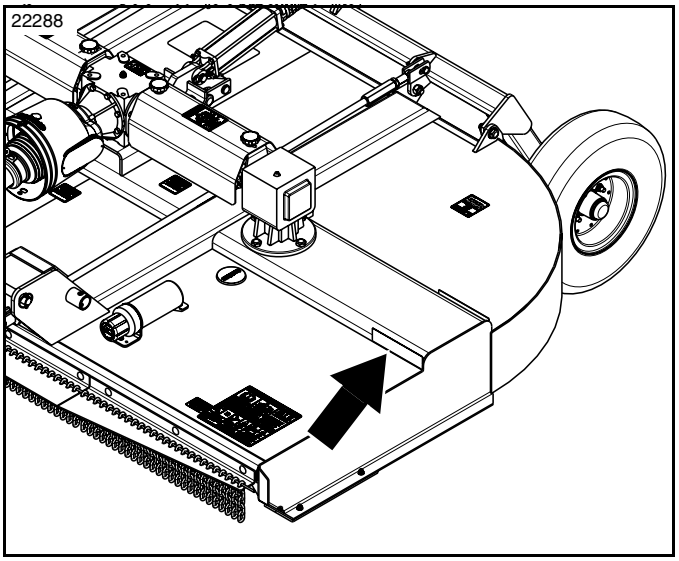



73138

838-615C

Amber Reflector: 2" x 9"

1 Place: Front left side of deck only

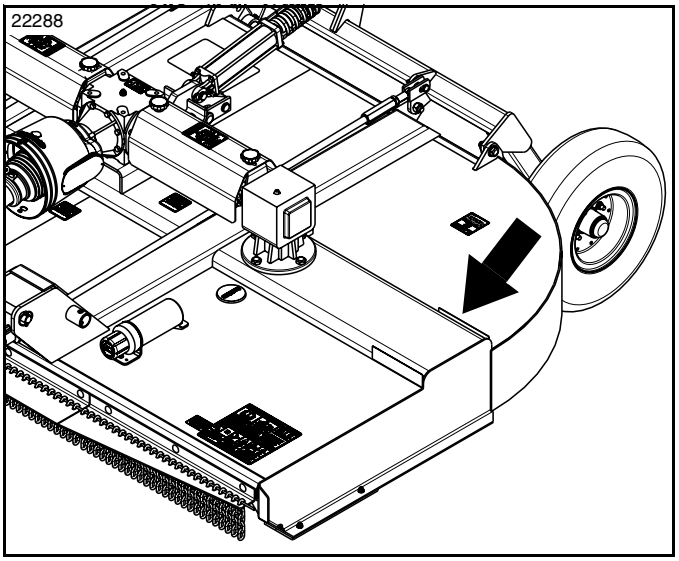



838-614C

Red Reflector: 2" x 9"

2 Places: Rear left side and rear right side of deck

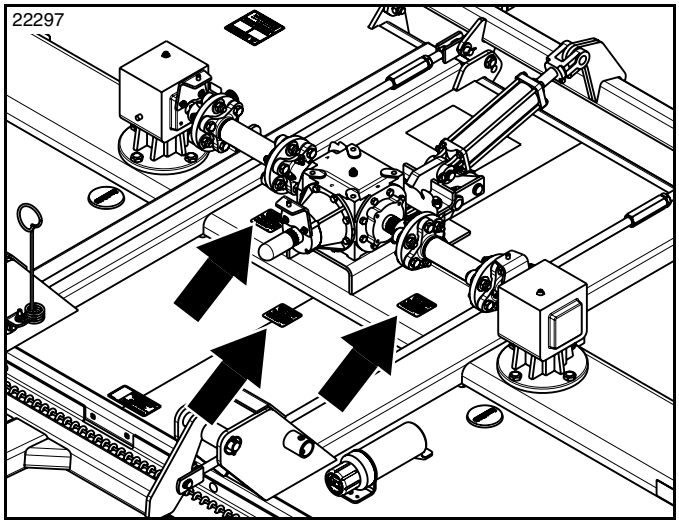

70358



818-543C
Danger: Guard Missing Hazard - Do not Operate
3 Places: Beneath the drivelines

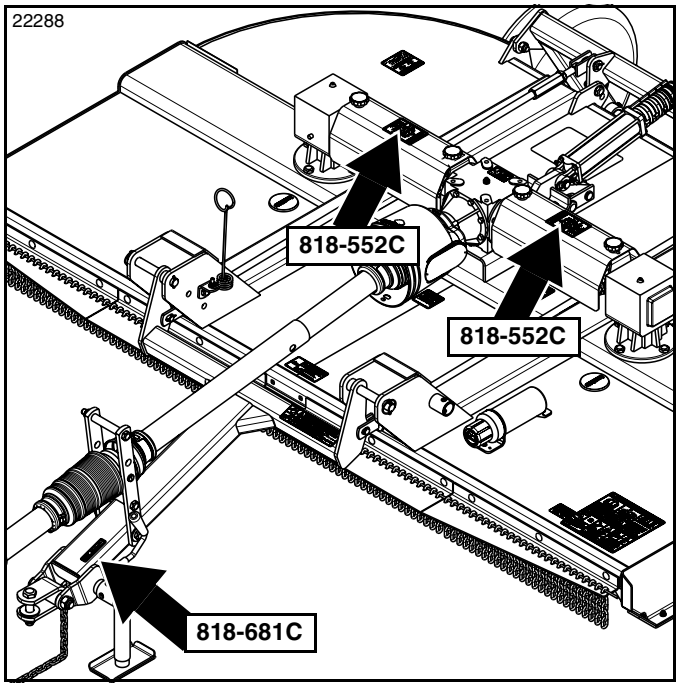

70375



818-552C
Danger: Rotating Driveline - Keep Away
2 Places: On the outer shields above the flex couplers

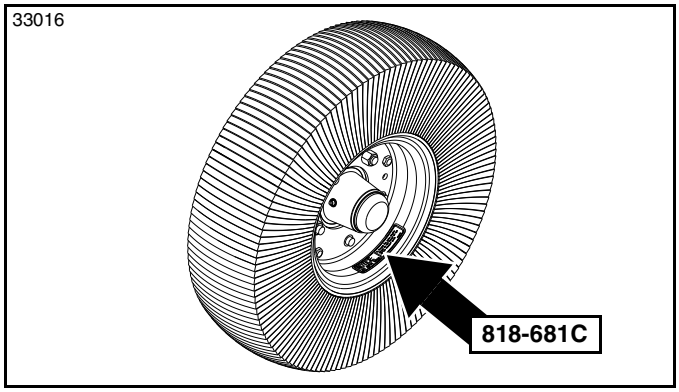

73654



818-681C
Notice: Maximum Transport Speed Hazard (20 mph)
1 Place: On pull-type hitch (See center illustration)
2 Places: On each gauge wheel (See bottom illustration)

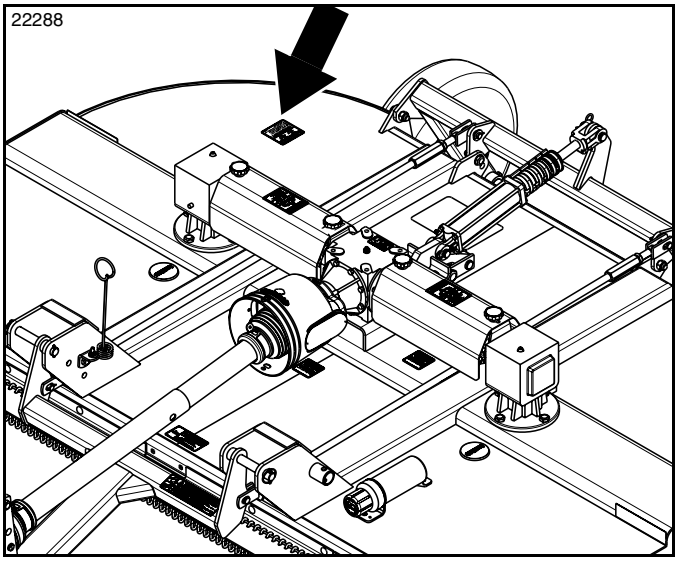

70266



818-555C

Danger: Rotating Blade Hazard

1 Place: On the back right corner of the deck

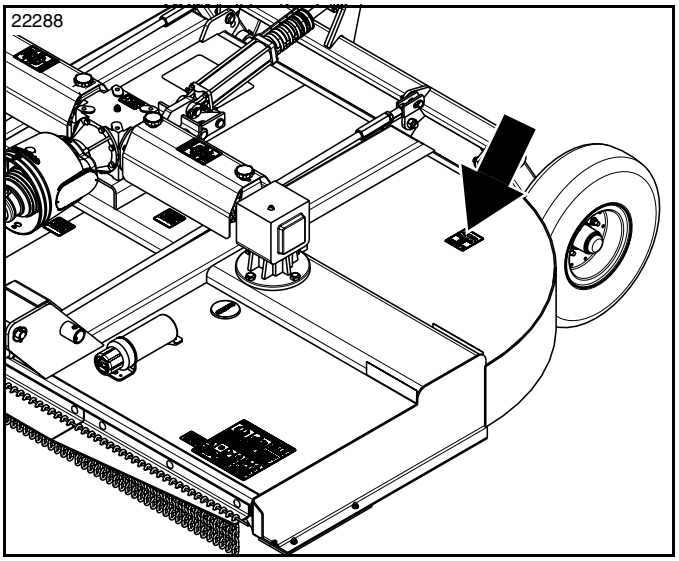

70376



818-556C

Danger: Thrown Object Hazard

1 Place: On the back left corner of the deck

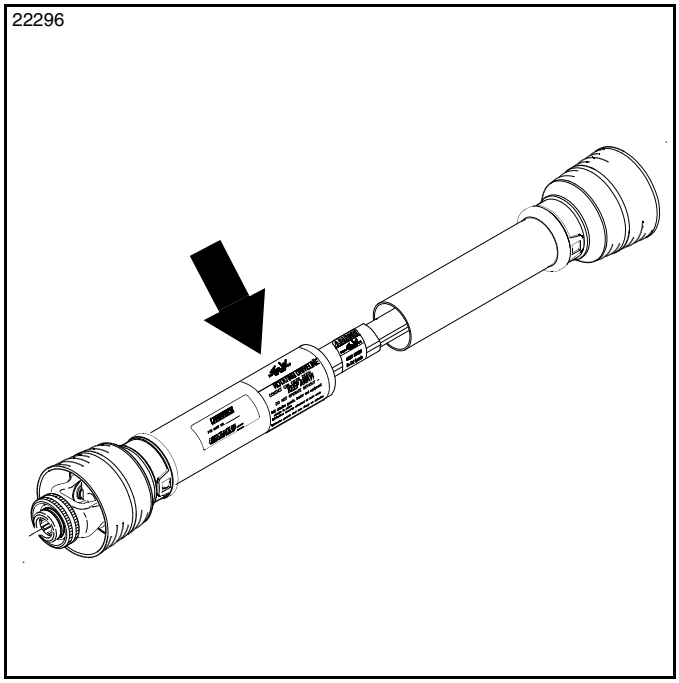

70375



818-552C
Danger: Rotating Driveline - Keep Away
2 Place: One on each driveline outer shield

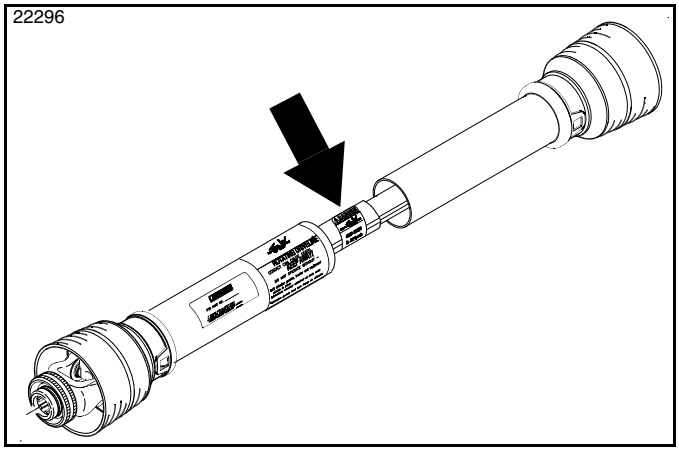

70374



818-540C
Danger: Guard Missing Hazard - DO NOT Operate
2 Places: One on each driveline outer profile

This page left blank intentionally.

Land Pride welcomes you to the growing family of new product owners. This Rotary Cutter has been designed with care and built by skilled workers using quality materials. Proper assembly, maintenance, and safe operating practices will help you get years of satisfactory use from this product.

Application

The standard utility duty RCR2510 Rotary Cutter is designed and built by Land Pride to provide excellent cutting performance on gently sloping or slightly contoured right-of-ways, pastures, set-aside-acres, and row crop fields. The ten foot (3.05 m) cutting width, 2"-12" (5-30 cm) cutting height and ability to cut weeds and brush up to 1 1/2" (3.8 cm) in diameter make it well suited for these applications.

The RCR2510 cutter operates at a power take-off speed of 540 rpm. It is offered with choice of either a category four equal angle driveline or category four constant velocity driveline and is available with either a pull-type hitch or category II or III three-point hitch. The three-point hitch is Quick-Hitch adaptable.

The three-point hitch requires a 60-110 hp (45-82 kW) tractor while the pull-type hitch requires a 50-110 hp (37-82 kW) tractor.

Stump jumpers, main driveline slip-clutch, and outboard flex couplers are also offered for driveline and gearbox protection. Safety shields around the cutter are offered in either chain or rubber.

See **"Specifications & Capacities"** on page 50 and **"Features & Benefits"** on page 53 for additional information and performance enhancing options.

Using This Manual

- This Operator's Manual is designed to help familiarize you with safety, assembly, operation, adjustments, troubleshooting, and maintenance. Read this manual and follow the recommendations to help ensure safe and efficient operation.
- The information contained within this manual was current at the time of printing. Some parts may change slightly to assure you of the best performance.
- To order a new Operator's or Parts Manual, contact your authorized dealer. Manuals can also be downloaded, free-of-charge, from our website at www.landpride.com

Terminology

"Right" or "Left" as used in this manual is determined by the direction the operator faces while sitting in the operator's seat looking forward unless otherwise stated.

Owner Assistance

The dealer should complete the Online Warranty Registration at the time of purchase. This information is necessary to provide you with quality customer service.

The parts on your Rotary Cutter have been specially designed by Land Pride and should only be replaced with genuine Land Pride parts. Contact a Land Pride dealer if customer service or repair parts are required. Your Land Pride dealer has trained personnel, repair parts, and equipment needed to service the implement.

Serial Number

For quick reference and prompt service, record model and serial number on the inside cover page and again on the warranty page. Always provide model number and serial number when ordering parts and in all correspondence with your Land Pride dealer. For location of your serial number plate, see Figure 1.

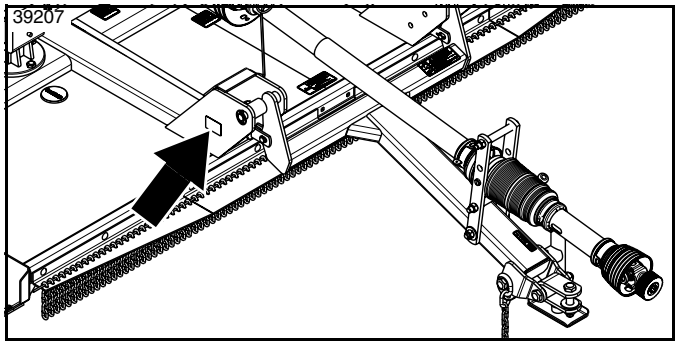

Serial Number Plate Location
Figure 1

Further Assistance

Your dealer wants you to be satisfied with your new cutter. If for any reason you do not understand any part of this manual or are not satisfied with the service received, the following actions are suggested:

1. Discuss any problems you have with your implement with your dealership service personnel so they can address the problem.
2. If you are still not satisfied, seek out the owner or general manager of the dealership, explain the problem/question, and request assistance.
3. For further assistance write to:

Land Pride Service Department
1525 East North Street
P.O. Box 5060
Salina, Ks. 67402-5060

E-mail address
lpservice@landpride.com

Tractor Requirements

WARNING

To avoid serious injury or death:

Lightweight tractors with rear attached implements may need weights added to the front to maintain steering control. Consult your tractor Operator's Manual to determine weight requirements and maximum limitations.

Tractor horsepower and weight must be capable of controlling the cutter under all operating conditions. Tractors outside the horsepower range must not be used.

Horsepower rating
- Three-point hitch . . . . . 60-110 hp (45-82 kW)
- Pull-type hitch . . . . . 50-110 hp (37-82 kW)

3-Point hitch category . . . . . Cat. II or III

Rear power take-off speed . . . . . .540 rpm

Power take-off shaft type . . . . . 1 3/8"-6 Spline

Pull-Type Hitch

Refer to Figure 1-1:

Distances between center of drawbar hitch pin hole to end of tractor power take-off shaft ("A" dimension) and from top of drawbar hitch to center of power take-off shaft ("B" dimension) must be maintained for Pull-type hitches.

- "A" = 14" (35.6 cm) for 540 rpm
- "B" = 8" (20.3 cm) for 540 rpm

IMPORTANT: Power take-off damage may occur if distances "A" and "B" are not properly maintained.

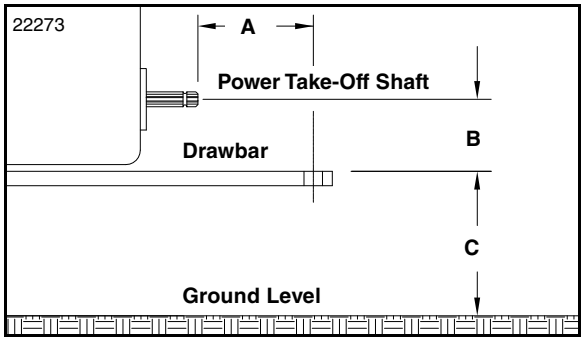

Power Take-Off to Drawbar Distance
Figure 1-1

3-Point Hitch

The lower 3-point arms must be stabilized to prevent side-to-side movement. Most tractors have sway blocks or adjustable chains for this purpose.

Dealer Preparations

Read and understand the operator's manual for your cutter. An understanding of how it works will aid in the assembly and setup of your cutter.

This Rotary Cutter has been partially assembled at the factory. However, some assembly will be necessary to attach the hitch, driveline, and guards to the cutter.

It is best to go through the **"Pre-Assembly Checklist"** below before assembling the cutter. Speed up your assembly task and make the job safer by having all the needed parts and equipment readily at hand.

Pre-Assembly Checklist

✔	Check	Page
☐	Have a forklift or hoist with properly sized chains and safety stands capable of lifting and supporting the equipment on hand.	
☐	Have a minimum of 2 people on hand while assembling.	
☐	Make sure all major components and loose parts are shipped with the machine. Refer to this manual if unsure.	
☐	Make sure working parts move freely, bolts are tight and cotter pins are spread. Refer to this Operator's Manual.	
☐	Double check to make sure all fasteners and pins are installed correctly. Use Parts Manual 312-753P if unsure. Refer to "Using This Manual" on page 13 for instructions on how to order or download a Parts Manual. **NOTE:** Small hardware shipped loose from the factory is contained in a bag. Larger parts are attached to the shipping crate. All factory assembled hardware should be installed in their correct location. Remember their location if removed. Keep removed parts separated.	
☐	Make sure all safety labels are legible and correctly located. Reflectors must be visible when machine is in transport position. Replace all missing / damaged labels and reflectors.	Page 6
☐	Make sure the driveline slip-clutch has had a run-in procedure just prior to initial operation. Refer to Driveline Maintenance.	Pages 39 to 43
☐	Make sure all grease fittings are in place and lubricated. Refer to Lubrication Points.	Page 47
☐	Lubricate all drivelines joints and profiles. Refer to Lubrication Points.	Page 48
☐	Check fluid level in all gearboxes. Refer to the Maintenance and Lubrication section.	Page 48
☐	Make sure all pneumatic tires are properly inflated and all wheel bolts and axle nuts are tightened to the specific torque.	Page 56

Gearbox Vent Plugs & Dipsticks

IMPORTANT: Gearboxes are shipped with solid plugs in them to prevent oil loss during shipping and handling. The solid plug on top of the gearbox must be replaced with a vented dipstick before operating the implement.

Vent Plug Installation

Refer to Figure 1-2 & Figure 1-3:

Vent plugs are shipped loose and packaged with the Operator's Manual. Remove temporary solid plugs on top of gearboxes and replace with included 3/8" vent plug. See your nearest Land Pride dealer if vent plugs are missing.

Torque Requirements

Refer to **"Torque Values Chart"** on page 56 to determine correct torque values for common bolts. See **"Additional Torque Values"** at bottom of chart for exceptions to standard torque values.

Tractor Shutdown Procedure

The following are basic tractor shutdown procedures. Follow these procedures and any additional shutdown procedures provided in your tractor Operator's Manual before leaving the operator's seat.

1. Reduce engine speed and disengage power take-off if engaged.
2. Park tractor and implement on level, solid ground.
3. Lower implement until it is flat on the ground or on non-concrete support blocks.
4. Put tractor in park or set park brake, turn off engine, and remove ignition key to prevent unauthorized starting.
5. Relieve all hydraulic pressure to auxiliary hydraulic lines.
6. Wait for all components to come to a complete stop before leaving the operator's seat.
7. Use steps, grab-handles and anti-slip surfaces when stepping on and off the tractor.

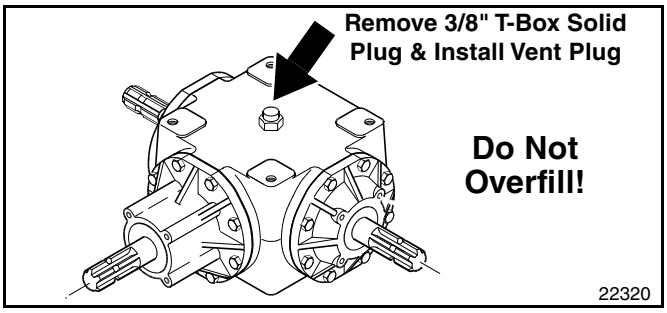

T-Gearbox
Figure 1-2

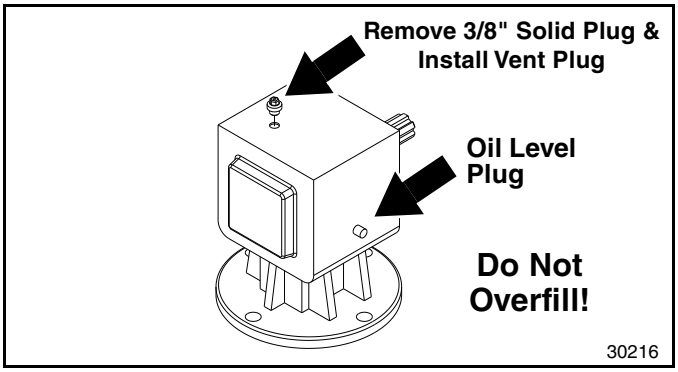

Blade Drive Gearboxes
Figure 1-3

Pull-Type Cutter

Hitch Assembly

NOTE: Do not tighten hardware to the correct torque until assembly is complete.

NOTE: If preferred, the front guards may be assembled first. See **"Assembly of Optional Equipment"** on page 25 for front guard assembly instructions.

Refer to Figure 1-4:

1. Assemble tongue (#1) using hitch pins (#2), spacer tubes (#3), and hairpins/linchpins (#4).
2. Attach level rod assemblies (#8) to tongue (#1) using clevis pins (#5), flat washers (#6) and cotter pins (#7). Make sure level rod adjusting nuts are threaded the same distance on both rods. This will ensure a level unit.
3. Remove hydraulic hose holder (#9) from the hitch and install to the cutter deck with 3/4" x 1 1/2" GR5 hex head cap screw (#12) and 3/4" hex locknut (#13) as shown. Tighten mounting bracket hardware as needed to secure hose holder in place.
4. Route hydraulic hose through the hose holder loop.
5. Remove parking jack (#10) from its storage position on the deck and attach to the tongue (#1). Secure with attached pin (#11). Adjust jack to desired height.

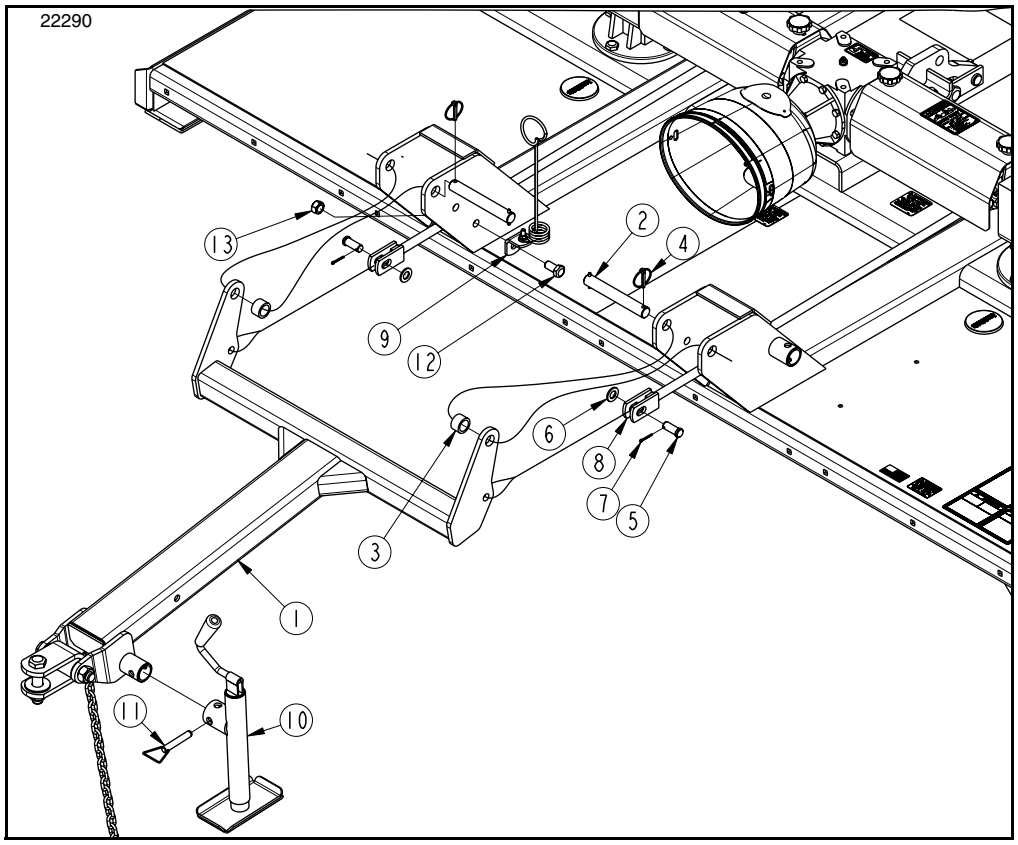

RCR2510 Hitch Assembly
Figure 1-4

Equal Angle Driveline Installation

Refer to Figure 1-5:

Equal angle drivelines can be installed. Maximum turning angle is limited to 35 degrees.

DANGER

To avoid serious injury or death:

Make certain driveline yokes are securely fastened at each end. A loose yoke can work free allowing the driveline to rotate uncontrollably.

WARNING

To avoid serious injury or death:

Maximum equal angle driveline turning angle is limited to 35 degrees. Exceeding this angle can cause the driveline to break and send flying objects.

IMPORTANT: The driveline must be lubricated before putting it into service. Refer to **"Lubrication Points"** on page 47.

1. Unsnap one end of gearbox shield access doors (#7) and rotate doors open.
2. Remove protective sleeve (#11) from input shaft of gearbox (#1) and discard.
3. Remove nuts (#10), lock washers (#9), and clamp bolts (#8) from slip-clutch end of driveline (#2).
4. Slide slip-clutch end of driveline onto gearbox input shaft until hole in yoke aligns with notch in shaft.
5. Insert 2- bolts (#10) through holes in driveline yoke as shown and secure with lock washers (#9) and nuts (#10). Tighten bolts to 45-50 ft-lbs of torque.
6. Push/pull on driveline yoke to be sure it is securely fastened to the gearbox shaft.

NOTE: Make sure locking collar on bearing (#3) is facing rearward toward the cutter gearbox.

7. Insert jackshaft of driveline (#2) through bearing support assembly (#3). Pull bearing support assembly fully against driveline (#2) to extend jackshaft splines fully through the bearing.
8. Attach main driveline (#4) to jackshaft of driveline (#2) by pulling on locking collar and pushing driveline yoke forward onto the jackshaft until locking collar has locked in place. Push/pull on driveline yoke to be sure it is securely fastened to jackshaft (#2).
9. Tighten set screw in bearing locking collar (#3).
10. Rotate gearbox shield access doors (#7) closed and snap in place.

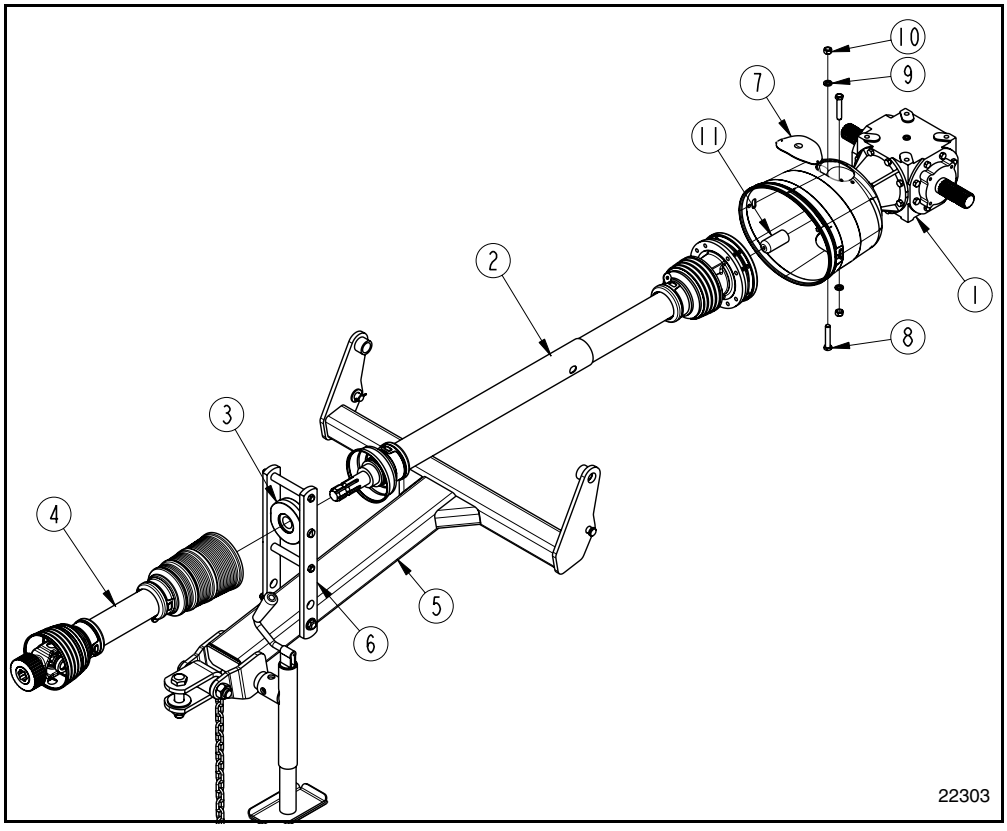

Equal Angle Driveline Assembly
Figure 1-5

Constant Velocity Driveline Installation

DANGER

To avoid serious injury or death:

Make certain driveline yokes are securely fastened at each end. A loose yoke can work free allowing the driveline to rotate uncontrollably.

WARNING

To avoid serious injury or death:

Maximum constant velocity driveline turning angle is limited to 80 degrees Exceeding this angle can cause the driveline to break and send flying objects.

IMPORTANT: The driveline must be lubricated before putting it into service. Refer to **"Lubrication Points"** on page 47.

NOTE: Do not tighten hardware until assembly or driveline is complete.

Refer to Figure 1-6:

Constant velocity driveline can be installed on RCR2510 cutter only. Maximum turning angle is limited to 80 degrees.

1. Unsnap one end of gearbox shield access doors (#7) and rotate doors open.
2. Remove protective sleeve (#11) from input shaft of gearbox (#1) and discard.
3. **RCR2510 only:** Remove slip-clutch mounting hardware from driveline (#1) as follows:
   - **Conical Dog Option:** Remove 1-nut (#10), 1-lock washer (#9), and 1-conical dog pin (#8) from slip-clutch end of driveline (#1).
   - T**wo Bolt Option:** Remove 2-nuts (#10), 2-lock washers (#9), and 2-bolts (#8) from slip-clutch end of driveline (#2).
4. Slide slip-clutch end of driveline (#1) onto input shaft of gearbox (#6) until hole in yoke aligns with notch in input shaft.
5. **RCR2510 only:** Install slip-clutch mounting hardware as follows:
   - **Conical Dog Option:** Insert 1-conical dog pin (#8) through hole in yoke and secure with lock washer (#9) and nut (#10).
   - T**wo Bolt Option:** Insert 2-bolts (#10) through holes in driveline yoke as shown and secure with lock washers (#9) and nuts (#10).
6. Tighten nut (#10) to 45-50 ft-lbs (61-68 Nm) of torque.
7. Push/pull on driveline yoke to be sure it is securely fastened to the gearbox shaft.
8. Rotate gearbox shield access doors (#7) closed and snap in place.

NOTE: Make sure locking collar on bearing (#7) is facing forward toward the tractor.

9. Fully insert jackshaft driveline (#1) into pillow block bearing (#7).
10. Secure bearing support (#2) with 1/2"-13 x 3 1/2" bolts (#3) and hex flange nuts (#4). Do not tighten nuts (#4) at this time.
11. Remove locknut (#12) and bolt (#13) from bolted coupler end of driveline (#5).
12. Push bolted coupler end of main driveline (#5) onto the jackshaft of driveline (#1) as far as possible.
13. Attach driveline (#5) to jackshaft driveline with removed bolt (#13) and locknut (#12). Tighten locknut to 45-50 ft-lbs (61-68 Nm) of torque.
14. Tighten nuts (#4) to the proper torque.
15. Rotate locking collar in bearing (#7) clockwise until tight.
16. Tighten set screw in bearing (#7) locking collar.

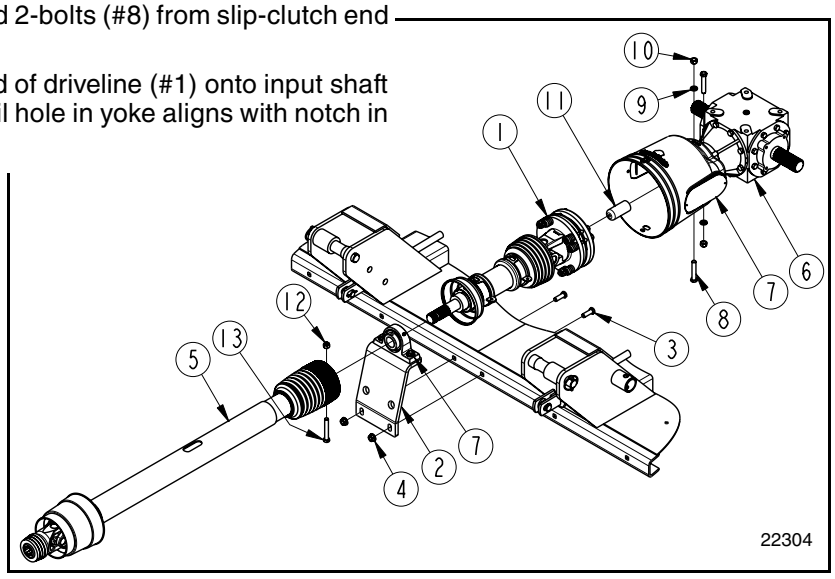

RCR2510 Constant Velocity Driveline Assembly
Figure 1-6

Pull-Type Hook-Up

Refer to Figure 1-7:

DANGER

To avoid serious injury or death:

A crushing hazard exists while connecting and disconnecting the implement. Keep people and animals away while backing-up to the implement or pulling away from the implement. Do not operate hydraulic controls while a person or animal is directly behind the power machine or near the implement.

WARNING

To avoid serious injury or death:

- *Always disengage power take-off, put tractor in park or set park brake, shut tractor engine off, remove ignition key, and wait for blades to come to a complete stop before dismounting tractor.*
- *Park jack must be installed and retaining jack pin must be fully inserted and secured before working on or around an implement not connected to a tractor.*

Distances between center of drawbar hitch pin hole to end of tractor power take-off shaft and from top of drawbar hitch to center of power take-off shaft must be maintained when using Pull-type hitches. See **"Pull-Type Hitch"** on page 14 for correct distances.

1. Make certain jack stand (#1) is properly attached to cutter hitch and secured with attachment pin (#2).
2. Back tractor within close proximity of cutter clevis (#6).
3. Raise or lower jack (#1) to align clevis (#6) with tractor drawbar. Drawbar should fit between lower and upper plates of clevis.
4. Back tractor up to cutter hitch until holes in the drawbar and clevis (#6) are aligned.
5. Insert 1" flat washers (#5) above and below tractor drawbar.
6. Insert 1" -8 x 4 1/2" GR5 hex bolt (3) through top of clevis (#6), 1" washer (#5), tractor drawbar, remaining 1" washer (#5), and through bottom plate in clevis (#6). Secure bolt with locknut (#4). Tighten locknut snugly to remove all play and then back nut one-quarter turn.

NOTE: Length of leveling rod couplers may need adjusting to obtain correct drawbar height. See **"Pull-Type Leveling & Cutting Height"** on page 28

7. Attach pull collar end of driveline (#8) to tractor power take-off shaft. Secure with locking device. Pull on both ends of the driveline to make sure it is secured to the tractor and gearbox shafts.
8. Thread hydraulic hose (#9) through spring hose loop (#10) and attach to tractor hydraulic outlet.
9. Lower park jack (#1)until cutter hitch weight is supported by tractor drawbar, remove detent pin (#2), and park jack (#1).
10. Store park jack (#1) on the cutter deck with detent pin as shown.

Safety Chain

Refer to Figure 1-7:

When towing implements on the road, use safety chain (#7) to contain the implement should the hitch pin become lost. After attaching the safety chain to the tractor, check chain length by driving the tractor to the right and to the left for a short distance. If necessary, re-adjust chain length to eliminate a tight or loose chain. Make sure the chain hook is securely locked in place when finished.

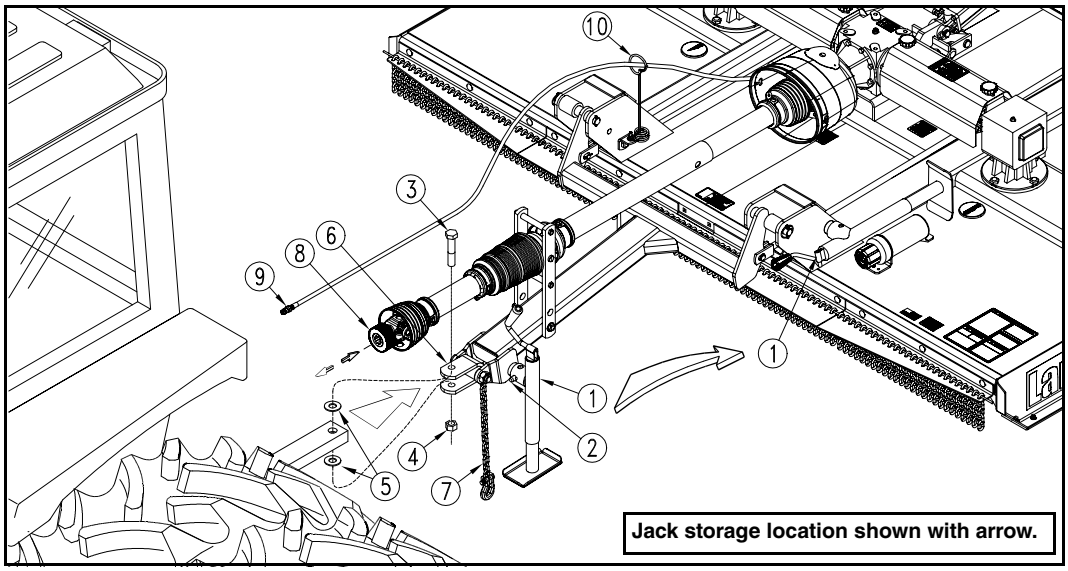

Pull-Type Tractor Hook-Up
Figure 1-7

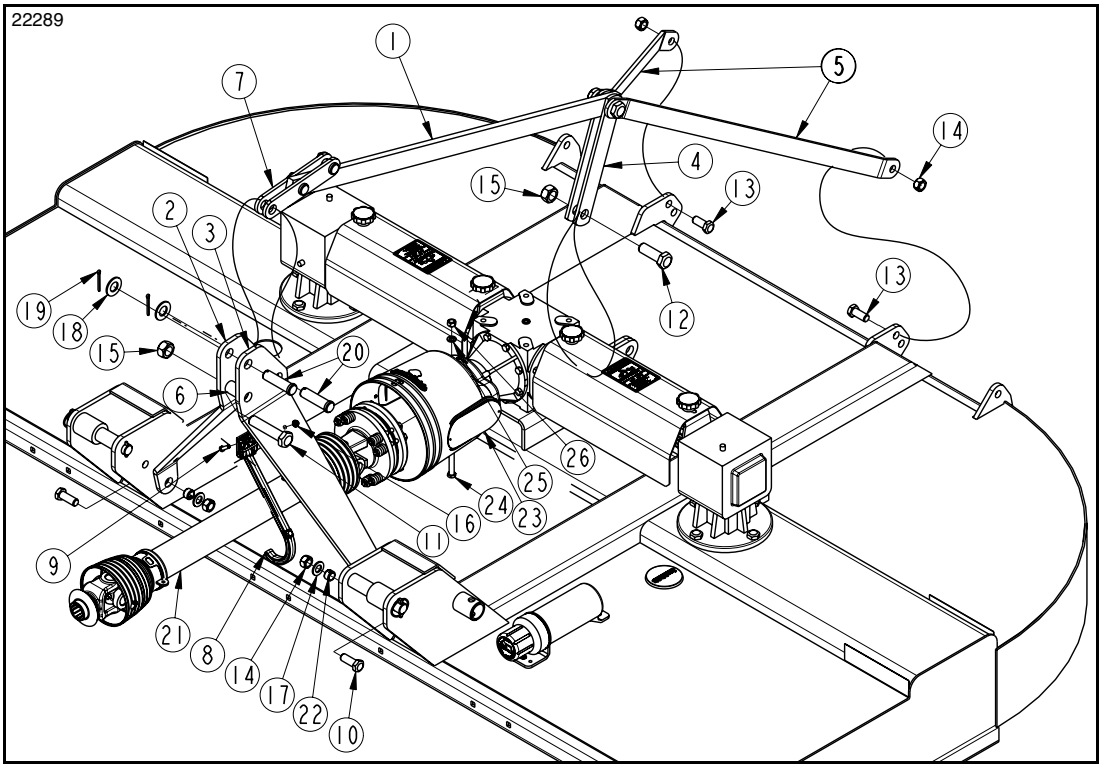

Lift Type Cutter 3-Point Assembly
Figure 1-8

3-Point Lift-Type Cutter

Hitch Assembly

Refer to Figure 1-8:

> **NOTE:** Do not tighten hardware until assembly of hitch and driveline is complete. Refer to **"Torque Values Chart"** on page 56.

1. Insert 5/8" (16 mm) long bushings (#22) into the bottom holes of A-Frame hitch plates (#2) and attach hitch plates to the lower bolt holes of the 3-point hitch plates with 3/4"-10 x 2" GR5 bolts (#10), flat washers (#17), and locknuts (#14).
2. Place 2" (5.1 cm) long bushing (#6) between the two A-Frame hitch plates and insert 1"-8 x 4 1/2" GR5 cap screw (#11) through the A-Frame hitch plate holes and bushing. Secure bolt with locknut (#15).
3. Attach the two short braces (#7) on rear brace assembly (#1) between the back two holes in the A-Frame hitch with clevis pin (#20). Secure clevis pin with flat washer (#18) and cotter pin (#19).
4. Attach the two longer braces (#4) on rear brace assembly (#1) to the front hole of the lug welded behind the gearbox mount with 1"-8 x 3" GR5 cap screw (#12) and locknut (#15).
5. Assemble rear braces (#5) to the inside of inner rear lugs with 3/4"-10 x 1 3/4 GR5 cap screws (#13) and locknuts (#14).
6. Install remaining clevis pin (#20), flat washer (#18), and cotter pin (#19) in the top front holes in the A-Frame hitch as shown.
7. Attach driveline hook (#8) to A-frame (#3) using 5/16"-18 x 1 1/4" bolt (#9) and locknut (#16).
8. Tighten all assembled hardware to the correct torque.

Driveline Installation

Refer to Figure 1-8 on page 20:

DANGER

To avoid serious injury or death:

Make certain driveline yokes are securely fastened at each end. A loose yoke can work free allowing the driveline to rotate uncontrollably.

IMPORTANT: The drivelines must be lubricated before putting them into service. Refer to **"Lubrication Points"** on page 47.

1. Unsnap gearbox shield access doors (#23) and rotate doors open.
2. Remove protective sleeve from gearbox input shaft.
3. Remove nut (#26), lock washer (#25), and clamp bolt (#24) from slip-clutch end of driveline (#21).
4. Slide slip-clutch end of driveline (#21) onto gearbox input shaft until hole in yoke aligns with notch in shaft.
5. Insert clamp bolt (#24) through hole in yoke and secure with lock washer (#25) and nut (#26). Tighten nut to the correct torque.
6. Push/pull on driveline yoke to be sure it is securely fastened to the gearbox shaft.
7. Rotate gearbox shield access doors closed and snap in place.
8. Collapse driveline (#21) by pushing on tractor end of driveline toward the gearbox.
9. Support driveline on driveline support hook (#8).

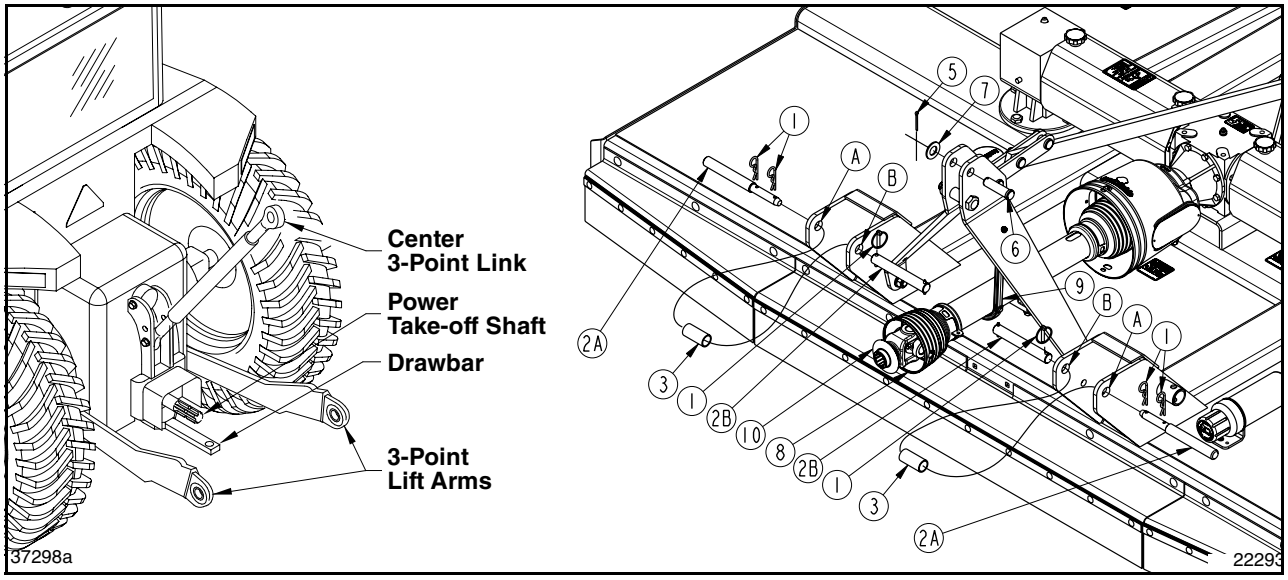

3-Point Lift Type Cutter Tractor Hook-Up
Figure 1-9

3-Point Hook-Up

Refer to Figure 1-9:

DANGER

To avoid serious injury or death:

- *A crushing hazard exists while connecting and disconnecting the implement. Keep people and animals away while backing-up to the implement or pulling away from the implement. Do not operate hydraulic controls while a person or animal is directly behind the power machine or near the implement.*
- *All guards and shields must be installed and in good working condition while operating the implement.*
- *Do not engage power take-off while connecting or disconnecting the driveline, or while someone is standing near the driveline. A person's body and/or clothing can become entangled in the driveline.*

WARNING

To avoid serious injury or death:

Always follow "Tractor Shutdown Procedure" provided in this manual before dismounting the tractor.

IMPORTANT: The tractor's lower 3-point arms must be stabilized to prevent side-to-side movement. Most tractors have sway blocks or adjustable chains for this purpose.

NOTE: Land Pride's Quick Hitch can be attached to the tractor to provide quick and easy 3-point hook-up and detachment. See your nearest Land Pride dealer to purchase a Quick-Hitch.

1. Locate cutter on a flat level surface.
2. Determine the hitch category of the tractor that will be used:
   a. **Category II** tractors will have a lower 3-point hitch hole diameter of 1 1/8" (2.9 cm) (The top link hole diameter (cutter end) will be 1" (2.5 cm).
   b. **Category III** tractors will have a lower 3-point hitch hole diameter of 1 7/16" (3.7 cm). The top link hole diameter (cutter end) will be 1 5/16" (3.3 cm).
3. Remove lower hairpins/linchpins (#1) and hitch pins (#2) from lower clevises. Remove upper cotter pin (#5), flat washer (#7), and hitch pin (#6) from upper clevis.
4. Slowly back the tractor up to the cutter while using the tractor's 3-point hydraulic control lever to align lower 3-point arm hitch holes with hitch pin holes in the cutter's lower clevis.
5. Attach cutter to lower 3-point lift arms as follows:

   RCR2510 With Cat. II Tractor Hitch

   a. Discard bushing (#3).
   b. Insert hitch pins (#2B) through hitch hole "B", lower 3-point arm hitch holes, and then hitch hole "A".

   RCR2510 With Cat. III Tractor Hitch

   a. Place bushing (#3) inside lower 3-point lift arm hitch holes.
   b. Insert hitch pins (#2B) through lower hitch hole "B", bushing (#3), and then through hitch hole "A".
6. Secure hitch pins (#2A or #2B) with hairpins/ linchpins (#1).

7. Connect top center 3-point link to the upper pivot hitch using 1" (2.5 cm) clevis pin (#6), flat washer (#7), and cotter pin (#5). Spread both legs of cotter pin to prevent it from falling out.
8. The center 3-point link should be adjusted to allow for lateral float. Please consult you tractor's manual for adjusting instructions.
9. Adjust stabilizers on the tractor's lower 3-point arms to stop lateral float. Please consult your tractor's manual for adjusting instructions.

Driveline Hook-up

Refer to Figure 1-9 on page 22:

⚠ DANGER

To avoid serious injury or death:

- *Do not engage power take-off while connecting or disconnecting the driveline, or while someone is standing near the driveline. A person's body and/or clothing can become entangled in the driveline.*
- *All guards and shields must be installed and in good working condition while operating the implement.*
- *Do not use a power take-off adapter. The adapter will increase strain on the tractor's power take-off shaft causing possible damage to shaft and driveline. It will also defeat the purpose of the tractor's power take-off shield.*
- *Make certain driveline yokes are securely fastened at each end. A loose yoke can work free allowing the driveline to rotate uncontrollably.*

⚠ WARNING

To avoid serious injury or death:

- *Always follow "Tractor Shutdown Procedure" provided in this manual before dismounting the tractor.*
- *Check driveline when lowering implement to make sure it does not interfere with the tractor drawbar at maximum depth. If needed, shut tractor off and move or remove drawbar to prevent driveline damage.*

IMPORTANT: The drivelines must be lubricated before putting them into service. Refer to **"Lubrication Points"** on page 47.

IMPORTANT: An additional driveline may be required if implement is attached to more than one tractor or if a quick hitch is used.

IMPORTANT: Drivelines with friction clutches must go through a "run-in" prior to initial use and after long periods of inactivity. For detailed instructions, see **"Driveline Maintenance"** on page 39.

IMPORTANT: Check driveline minimum collapsible length before completing **"Driveline Hook-up"**. Structural damage to the tractor and cutter can occur if this check is not made. Refer to **"Check Driveline Collapsible Length"** on page 24.

1. If driveline collapsible length has not been checked, go to **"Check Driveline Collapsible Length"** on page 24. Otherwise, continue with step 2 below.
2. Park tractor on a level surface.
3. Shut tractor down before dismounting. Refer to **"Tractor Shutdown Procedure"** on page 15.
4. If tractor drawbar interferes with the driveline during hook-up, disconnect driveline and move drawbar forward, to the side, or remove.
5. Remove driveline (#8) from driveline support (#9). Driveline support is spring loaded and will rotate up against the A-frame.
6. Pull back on driveline yoke collar (#10) and push driveline yoke onto the tractor power take-off shaft. Release pull collar and continue to push driveline yoke forward until pull collar locks in place.
7. Pull on driveline yokes at the tractor and implement end to make sure it is secured to the tractor power take-off shaft and implement gearbox shaft.
8. Continue with **"Check Driveline Interference"** on page 25.

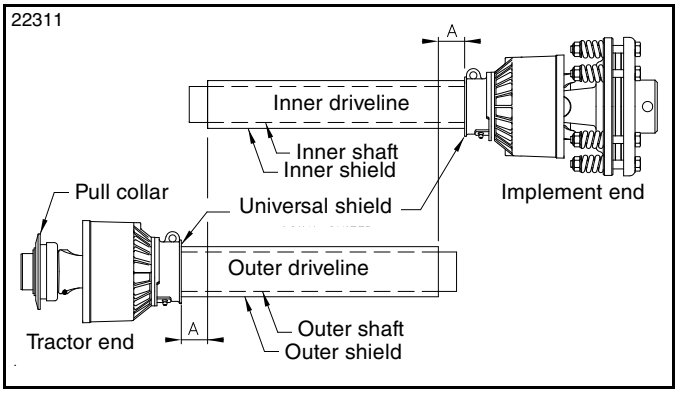

Check Driveline Minimum Length
Figure 1-10

Check Driveline Collapsible Length

IMPORTANT: A driveline that is too long can bottom out causing structural damage to the tractor and implement. Always check driveline minimum length during initial setup, when connecting to a different tractor, and when alternating between using a quick hitch and a standard 3-point hitch. More than one driveline may be required to fit all applications.

1. With driveline attached only to the cutter, remove outer driveline (tractor end) from inner driveline to separate the two profiles.
2. Park tractor and cutter on a level surface.
3. Raise cutter until gearbox input shaft is level with tractor power take-off shaft.
4. Securely block implement at this height with solid, non-concrete supports to keep it from lowering.
5. With cutter resting on the support blocks, shut tractor down according to **"Tractor Shutdown Procedure"** on page 15.

Refer to Figure 1-10:

6. Attach outer driveline to the tractor's power take-off shaft. Refer to **"Driveline Hook-up"** on page 23, steps 4-7.
7. Hold inner and outer drivelines parallel to each other as shown and measure distance "A".
   - If "A" is less than 1" (2.5 cm), continue with step 8 on this page.
   - If "A" is greater than or equal to 1" (2.5 cm), skip to **"Check Driveline Interference"** on page 25.

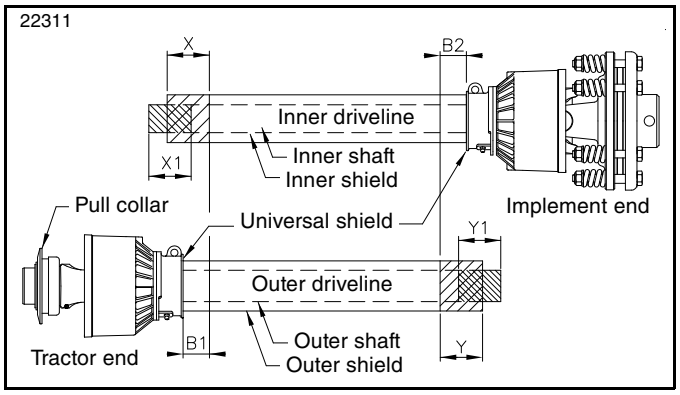

Shorten Driveline Length
Figure 1-11

Refer to Figure 1-11:

8. Shorten driveline as follows:
   a. Measure 1" (2.5 cm) (**"B1"** dimension) back from outer driveline shield and make a mark at this location on the inner driveline shield.
   b. Measure 1" (2.5 cm) (**"B2"** dimension) back from the inner driveline shield and make a mark at this location on the outer driveline shield.
9. Remove outer driveline from the tractor power take-off shaft and inner driveline from the cutter's gearbox shaft.
10. Cut off non-yoke end of inner driveline as follows:
    a. Measure from end of inner shield to scribed mark (**"X"** dimension) and record.
    b. Cut off inner shield at the mark. Cut same amount off the inner shaft (**"X1"** dimension).
11. Cut off non-yoke end of outer driveline as follows:
    a. Measure from end of outer shield to scribed mark (**"Y"** dimension) and record.
    b. Cut off outer shield at the mark. Cut same amount off the outer shaft (**"Y1"** dimension).
12. Remove all burrs and cuttings.
13. Continue with **"Check Driveline Interference"** on page 25.

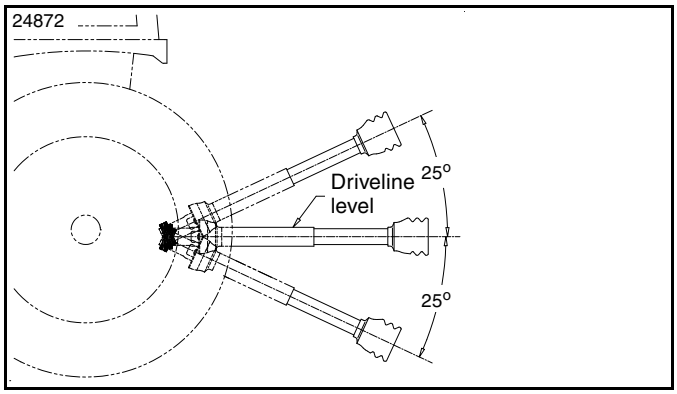

Maximum Allowable Driveline While Operating
Figure 1-12

Check Driveline Interference

Refer to Figure 1-12:

WARNING

To avoid serious injury or death:

A rotating driveline must not exceed an angle of 25 degrees up or down, and never engage a driveline while at an angle exceeding 25 degrees up or down. The driveline can break and send flying projectiles.

1. Lubricate driveline If it has not be lubricated. Refer to **"Lubrication Points"** on pages 49-49.
2. Attach driveline to the implement or tractor if it is not attached. See **"Driveline Installation"** on page 21 and **"Driveline Hook-up"** on page 23.
3. Start tractor and raise implement slightly off the support blocks. Drive forward until the implement is clear of the support blocks.
4. Slowly and carefully lower and raise cutter to ensure drawbar, tires, and other tractor equipment do not contact the cutter frame. If there is an interference:
   a. Back cutter over the support blocks and lower it onto the blocks.
   b. Shut tractor down before dismounting. Refer to **"Tractor Shutdown Procedure"** on page 15
   c. Move or remove drawbar if it interferes with the cutter and make any other necessary corrections.
   d. Repeat steps 1-4 to verify the cutter does not interfere with the tractor.
5. Start tractor and raise implement fully up. If implement is not above the support blocks, back implement over the support blocks. Do not lower implement onto the support blocks.
6. Without changing the 3-point lift height, shut tractor down using **"Tractor Shutdown Procedure"**.
7. Check to make sure the driveline angle does not exceed 25 degrees above horizontal as shown in Figure 1-12.
8. If driveline angle exceeds 25 degrees above horizontal, adjust 3-point lift height as follows:
   a. Adjust tractor 3-point lift limiter height to keep the driveline within the recommended lift angle.
   b. If the 3-point left lever does not have a lift height limiter, make a mark with tape or other means to indicate maximum lift height.
9. Start tractor, raise implement slightly, and drive forward enough to clear the support blocks.
10. Lower implement to ground and shut tractor down using **"Tractor Shutdown Procedure"**.

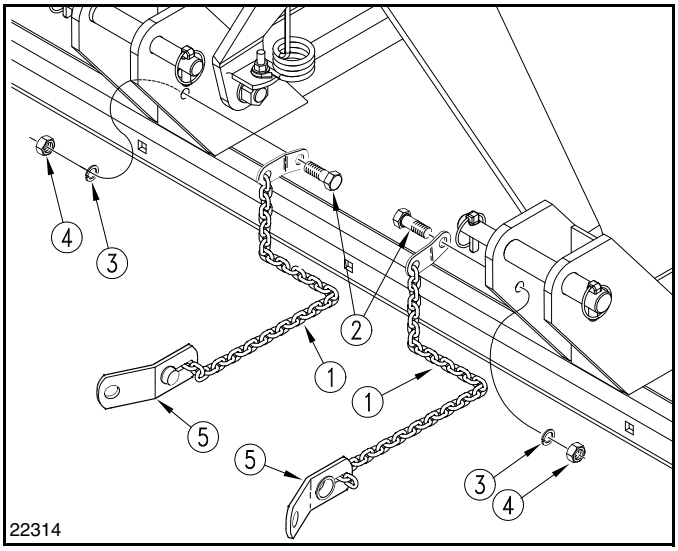

Check Chain Assembly
Figure 1-13

Check Chains (Accessory)

Refer to Figure 1-13:

For 3-Point Mounted Cutters
(Available through Land Pride parts department.)

Check chains are used to control the cutting height and allow the mower to be lowered to the same preset cutting height effortlessly.

1. Install lower end of check chain (#1) to the inner hitch ear as shown in Figure 1-13, using 3/4"-10 x 1 1/2 long bolts (#2), lock washers (#3), and nuts (#4). Tighten securely.
2. Install chain lugs (#5) on either side of the tractor top link mount using pin (not supplied).
3. Cutting height is then set by placing proper chain link in key slot (#5).

NOTE: For additional safety in transport, raise cutter as high as possible, and shorten check chains to prevent inadvertent falling in transport.

Chain Safety Guards (Optional)

DANGER

To avoid serious injury or death:

Rotary Cutters have the ability to discharge objects at high speeds; therefore, the use of front & rear safety guards is mandatory with this cutter. Stop blade rotation if bystanders are in or around the area. It is recommended that a safety shield be placed between the operator and cutter on an open air tractor.

WARNING

To avoid serious injury or death:

Keep all safety guards in place. Rotary Cutters have the ability to discharge objects at high speeds. Use extreme caution when cutting in areas where people may be present. It is best to operate the cutter when no one is nearby. Stop blade rotation if someone is in or around the area.

NOTE: Do not tighten hardware until assemblies are complete. Refer to **"Torque Values Chart"** on page 56.

Front Chain Guards

Refer to Figure 2-1:

Install front chain shields (#1) & (#2) with 1/2" -13 x 3 1/2" long carriage bolts (#3) and flange nuts (#4) as shown.

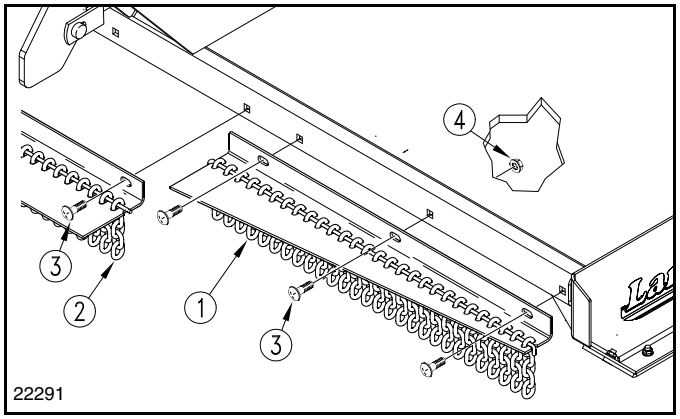

RCR2510 Front Chain Shield
Figure 2-1

Rear Chain Guards

Refer to Figure 2-2:

Install rear chain shield (#1) with 1/2" -13 x 1 1/2" long carriage bolts (#2) and 1/2" flange nuts (#3) as shown.

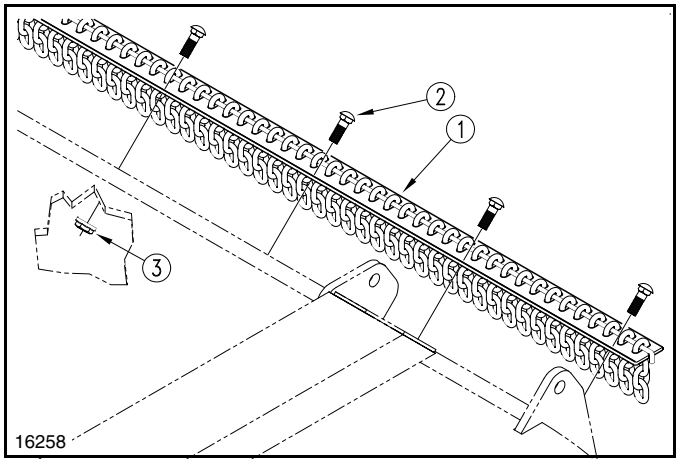

Rear Chain Shield
Figure 2-2

Rubber Safety Guards (Optional)

DANGER

To avoid serious injury or death:

Rotary Cutters have the ability to discharge objects at high speeds; therefore, the use of front & rear safety guards is mandatory with this cutter. Stop blade rotation if bystanders are in or around the area. It is recommended that a safety shield be placed between the operator and cutter on an open air tractor.

WARNING

To avoid serious injury or death:

Keep all safety guards in place. Rotary Cutters have the ability to discharge objects at high speeds. Use extreme caution when cutting in areas where people may be present. It is best to operate the cutter when no one is nearby. Stop blade rotation if someone is in or around the area.

NOTE: Do not tighten hardware until assemblies are complete. Refer to **"Torque Values Chart"** on page 56.

Front Rubber Guards
Figure 2-3:

Install front rubber shields (#1) & (#2) with 1/2" -13 x 3 1/2" long carriage bolts (#3) and flange nuts (#4) as shown.

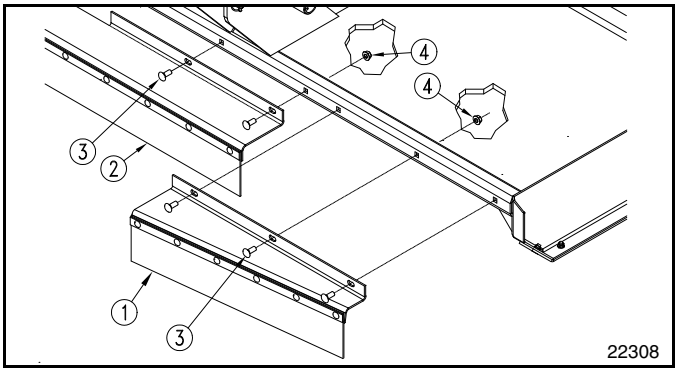

RCR2510 Front Rubber Shields
Figure 2-3

Rear Rubber Guards

Refer to Figure 2-4:

Install rear rubber shield (#1) and rear shield strap (#2) with 1/2" -13 x 1 1/2" long carriage bolts (#3) and 1/2" flange nuts (#4) as shown.

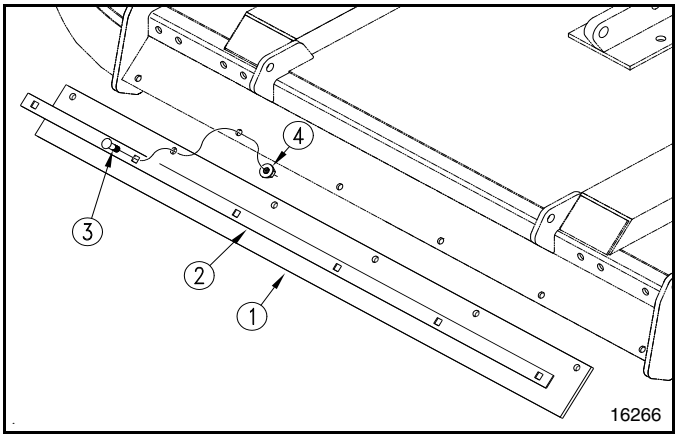

Rear Rubber Shield
Figure 2-4

Pull-Type Leveling & Cutting Height

See page 29 for **"3-Point Leveling & Cutting Height"**.

There are two primary adjustments that should be made prior to actual field operations:

- **Deck Leveling From Front to Back**
- **Pull-Type Cutting Height**

Proper adjustment of each of these items will provide for higher efficiency, improved cutting performance, and longer blade life. The following tools will be needed:

- Pliable tape measure
- Spirit or carpenter's level
- Open end or hex end wrench or socket set
- Protective gloves

WARNING

To avoid serious injury or death:

Always follow "Tractor Shutdown Procedure" provided in this manual before dismounting the tractor.

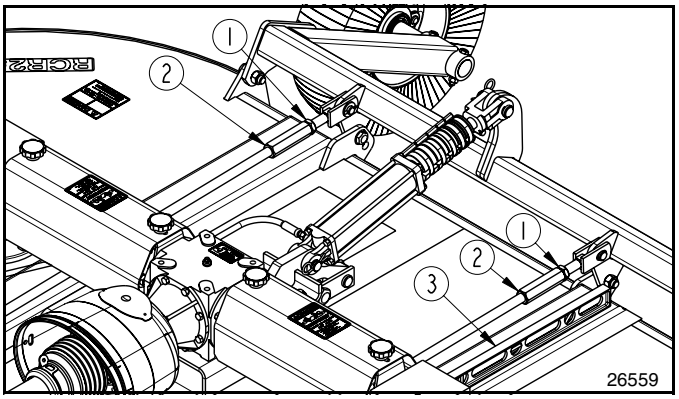

Deck Leveling
Figure 3-1

Deck Leveling From Front to Back

Refer to Figure 3-1:

1. Hook cutter to tractor. Refer to page 19 or 22.
2. Locate tractor with cutter on a flat, level surface.
3. Use tractor's hydraulics to adjust deck height above ground level 2 to 3 inches (5 to 8 cm).
4. Place a spirit level (#3) or other suitable leveling device on either of the main deck channels.

> **NOTE:** The unit cuts most efficiently if the front of the cutter is slightly lower than the back.
>
> Lengthening leveling rods with adjusting nuts (#2) lowers the front of the cutter.

5. If cutter deck is not slightly lower at the front than at the back, then loosen jam nuts (#1) on both sides and rotate leveling rod adjusting nuts (#2) until deck is slightly lower by an equal amounts on both sides.
6. Be sure that the right and left leveling rods are equally tight and then re-tighten jam nuts (#1).

Pull-Type Cutting Height

Refer to Figure 3-2:

Lift mechanism for pull-type units can be equipped with either a ratchet jack (#1) or hydraulic cylinder (#2). Adjust lifting mechanism if cutting height is too high or too low.

Ratchet Jack Instructions

The deck can be raised or lowered by setting the ratchet mechanism on the ratchet jack (#1) and then pumping the jack handle to raise or lower the cutter to desired cutting height.

Hydraulic cylinder Instructions

Stroke control spacers (#3) are included with the hydraulic set-up. They consist of cast steel halves with spring clips to hold the two halves together.

1. Extend the hydraulic cylinder to free up space on the cylinder rod for installing and removing spacers. Add or remove spacers as needed.
2. Retract hydraulic cylinder and re-measure to verify if cutting height is suitable.
3. Store stroke control spacers on hydraulic hose (#4) near the hydraulic cylinder.

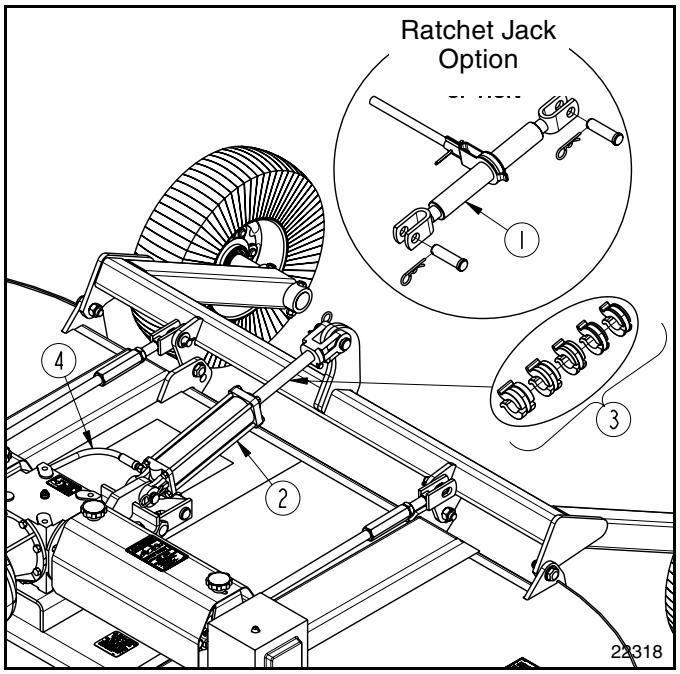

Pull-Type Lift Cutting Height
Figure 3-2

3-Point Leveling & Cutting Height

See page 28 for **"Pull-Type Leveling & Cutting Height"**.

There are four primary adjustments that should be made prior to actual field operations:

- **Deck Leveling From Left to Right**
- **Deck Leveling From Front to Rear**
- **Center Link Adjustment**
- **Tailwheel Height Adjustment**

Proper adjustment of each of these items will provide for higher efficiency, improved cutting performance, and longer blade life. The following tools will be needed:

- Pliable tape measure
- Spirit or carpenter's level
- Open end or hex end wrench or socket set
- Protective gloves

WARNING

To avoid serious injury or death:

Always follow "Tractor Shutdown Procedure" provided in this manual before dismounting the tractor.

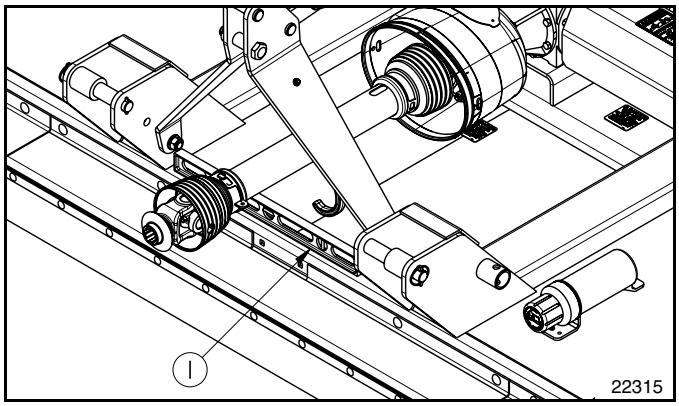

Deck Leveling
Figure 3-3

Deck Leveling From Left to Right

Refer to Figure 3-3:

Rotary Cutter must operate level from side to side at all times. Make certain gauge wheels are adjusted to identical heights before adjusting lower 3-point lift arms.

1. Having completed **"Tractor Hook-up"**, locate tractor and cutter on a flat, level surface.
2. Use tractor's hydraulic 3-point control lever to lower cutter until tailwheels make contact with the ground.
3. Place a spirit level (#1) or other suitable leveling device on the front of the cutter deck.
4. Adjust either one or both of the tractor's lower 3-point lift arms to level the deck from left to right. Some tractors have only a single adjusting lift arm.

Deck Leveling From Front to Rear

Refer to Figure 3-4:

WARNING

To avoid serious injury or death:

Avoid direct contact with cutter blades by wearing a pair of gloves. Cutter blades have sharp edges and burrs that can cause injuries.

IMPORTANT: The front blade tip should be slightly lower than the rear blade tip (about 1" or 2.5 cm lower). If not, the cutter is subject to continuous material flow under it's deck causing horsepower loss, grass clumps, blade wear, and frequent blade sharpening.

1. Using tractor's 3-point hydraulic control, raise or lower 3-point arms until front of deck is slightly lower than deck rear.
2. The top center link should be loose when deck rear is supported by the tailwheel. If not, lengthen center link until loose. Final adjustment will be made later.
3. With gloves on, carefully rotate each blade tip to the position shown in Figure 3-4.
4. Measure distance from cutting tip of blade to ground surface. This distance is the cutting height.
5. If desired cutting height cannot be obtained by adjusting the lower 3-point arms, then readjust tailwheel height. See **"Tailwheel Height Adjustment"** on page 30.
6. Repeat steps 1 to 5 until desired cutting height is achieved.
7. Set tractor's 3-point control stop at this height.

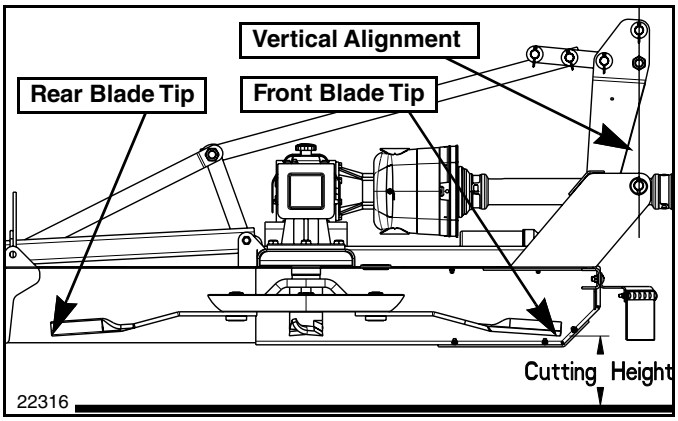

Figure 3-4

Center Link Adjustment

Refer to Figure 3-4:

1. Lower cutter deck to the nominal cutting height.
2. Adjust the top center 3-point link until the cutter hitch pin is vertically above the lower lift arm hitch pins.
3. Lock center link in this position once correct length is achieved.

Tailwheel Height Adjustment

Refer to Figure 3-5:

> **NOTE:** The unit cuts most efficiently if front of cutter is slightly lower than the back by not more than 1".

With Rotary Cutter lowered to nominal cutting height, measure distance from end of front blade cutting tip to ground and from end of rear blade cutting tip to ground. The tailwheel must be adjusted up or down if the rear blade tip is one of the following:

- Same distance off the ground as the front blade.
- Lower than the front blade.
- More than 1" higher off the ground than the front blade.

Adjust tailwheel if cutting height is too high or too low.

1. Use tractor's 3-point hydraulic control to lift cutter so that the tailwheel clears the ground.
2. Remove existing hardware; 1/2" -13 x 1 1/2" long carriage bolt (#1) and 1/2" flange nut (#2).
3. Adjust tailwheel up or down to desired cutting height by repositioning adjusting plate (#3) and then replacing the hardware.
4. Tighten 1/2" flange nut (#2) to the correct torque. Refer to **"Torque Values Chart"** on page 56**.**

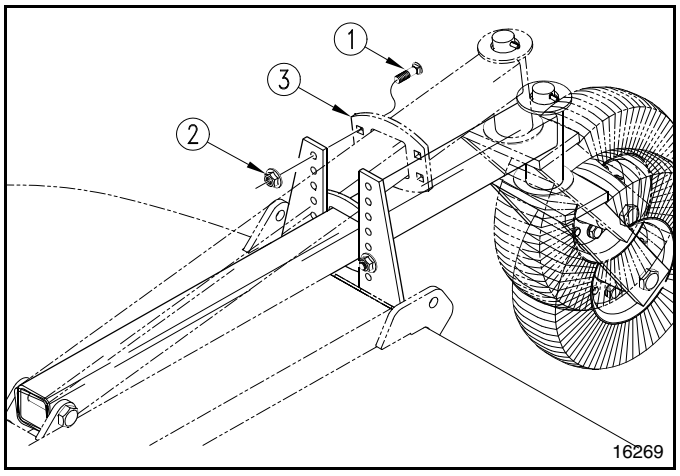

3-Point Cutter Height Adjustment
Figure 3-5

Operating Checklist

Hazard control and accident prevention are dependent upon the awareness, concern, prudence, and proper training involved in the operation, transport, maintenance, and storage of the Rotary Cutter. Therefore, it is absolutely essential that no one operates the cutter unless they have read, fully understood, and are totally familiar with the Operator's Manual. Make sure the operator has paid particular attention to:

- **Important Safety Information**, page 1
- **Section 1: Assembly & Set-up,** page 14
- **Section 3: Adjustments**, page 28
- **Section 4: Operating Procedures**, page 31
- **Section 5: Maintenance & Lubrication**, page 37

Perform the following inspections before using your Rotary Cutter.

Operating Checklist

✔	Check	Page
	Read and follow all safety information and alerts carefully. See "Important Safety Information".	1
	Make sure all guards and shields are in place. Refer to "Important Safety Information".	1
	Read and follow preparation instructions. Refer to "Section 1: Assembly & Set-up".	14
	Read and make all required adjustments. Refer to "Section 3: Adjustments".	28
	Read and follow all operating procedures. Refer to "Section 4: Operating Procedures".	31
	Read and follow all maintenance instructions. Refer to "Section 5: Maintenance & Lubrication".	37
	Make sure there are no hydraulic leaks on the unit. See "Avoid High Pressure Fluids Hazard".	3
	Read and follow all lubrication instructions. Refer to "Lubrication Points".	47
	Make sure all gearboxes are properly lubricated. Refer to "Gearbox lubrication".	48
	Check cutter initially and periodically for loose bolts and pins. Refer to "Torque Values Chart".	56

Safety Information

DANGER

To avoid serious injury or death:

- *Do not engage power take-off while connecting or disconnecting the driveline, or while someone is standing near the driveline. A person's body and/or clothing can become entangled in the driveline.*
- *All guards and shields must be installed and in good working condition while operating the implement.*
- *Tractor power take-off shaft shield, driveline shields, and gearbox shaft shields must be installed and in good working condition to avoid driveline entanglement and projectiles flying off of the driveline.*
- *Never place hands or feet under the deck or attempt to make adjustments to the cutter with power take-off engaged. Cutter blades rotating at high speeds cannot be seen and are located close to the deck sides. Body extremities will be cut off instantly.*
- *Always disconnect the driveline from the power take-off shaft before servicing underside of cutter. The tractor can be started with the power take-off engaged.*
- *Do not use cutter as a fan. Cutting blades are not properly designed or guarded for this use.*
- *Rotary Cutters have the ability to discharge objects at high speeds; therefore, the use of front & rear safety guards is mandatory with this cutter. Stop blade rotation if bystanders are in or around the area. It is recommended that a safety shield be placed between the operator and cutter on an open air tractor.*
- *Be sure deck is lowered to the ground and all hydraulic pressure is relieved before disconnecting or reconnecting hydraulic line and/or fittings between Rotary Cutter and tractor hydraulic system.*
- *Do not use a power take-off adapter. The adapter will increase strain on the tractor's power take-off shaft causing possible damage to shaft and driveline. It will also defeat the purpose of the tractor's power take-off shield.*

WARNING

To avoid serious injury or death:

- *Allow only persons to operate this implement who have fully read and comprehended this manual, and who are properly trained in the safe operation of this implement.*
- *Always follow "Tractor Shutdown Procedure" provided in this manual before dismounting the tractor.*
- *Hydraulic fluid under high pressure will penetrate the skin or eyes causing serious injury. Wear protective gloves and safety glasses or goggles when working with hydraulics. Use a piece of cardboard or wood, rather than hands, when searching for leaks. If an accident occurs, seek immediate emergency medical care or gangrene may result. DO NOT DELAY.*

⚠ WARNING

To avoid serious injury or death:

- *Do not operate and/or travel across inclines where the tractor and/or implement can rollover. Consult your tractor's manual for acceptable inclines the tractor is capable of traveling across.*
- *Select a safe ground speed that will allow adequate control of steering and stopping. Never exceed 20 mph (32 km/h) with attached equipment. Rough terrain requires a slower speed.*
- *Never carry riders on the equipment or power machine. Riders can obstruct the operator's view, interfere with controls, be pinched by moving components, become entangled in rotating components, struck by objects, thrown about, fall off and be run over, etc.*
- *Perform scheduled maintenance. Check for loose hardware, missing parts, broken parts, structural cracks, and excessive wear. Make repairs before putting the implement back into service.*
- *Always disengage power take-off before lifting cutter fully up. Never operate cutter in the raised position. The cutter can discharge objects at high speeds.*
- *A rotating driveline must not exceed an angle of 25 degrees up or down, and never engage a driveline while at an angle exceeding 25 degrees up or down. The driveline can break and send flying projectiles.*
- *Do not use implement as a man lift, work platform, or as a wagon to carry objects. It is not properly designed or guarded for this use.*
- *Do not exceed rated cutting capacity of your cutter. See specifications & capacities for specified cutting capacity. Exceeding rated cutting capacity can damage drive components, cutter blades, and deck components.*
- *Buildup of debris around moving components and gearboxes is a fire hazard. Keep rotating parts and gearboxes free from debris.*
- *Improper oil level can cause bearing failure and be a fire hazard. Maintain proper gearbox oil level.*
- *Do not operate a broken or bent driveline. Such a driveline will break apart while rotating at high speeds. Always remove the implement from use until the damaged driveline can be repaired or replaced.*
- *Some tractors are equipped with two power take-off speeds. Be certain your tractor's power take-off shaft is set-up to operate the implement at its rated power take-off speed. Do not exceed implement's rated power take-off speed. Excessive speed can damage drive/driven components and increase the risk of a thrown object hazard. See Specifications & Capacities for rated power take-off speed.*

Inspection of Tractor & Cutter

Make the following inspections with cutter attached to a tractor, power take-off disengaged, and all moving components completely stopped:

1. Park tractor and cutter on a level surface.
2. Disengage power take-off, place gear selector in park, set park brake, shut tractor off, and remove ignition key. Make sure cutter blades have come to a complete stop before dismounting from tractor.
3. Inspect tractor safety equipment to make sure it is installed and in good working condition.
4. Inspect cutter safety equipment to make sure it is installed and in good working condition.
5. Check driveline to make certain it is securely connected to the tractor power take-off shaft and cutter gearbox shaft. Also, make certain that the guards are in good working condition and in place.
6. Carefully raise and lower implement to ensure that the drawbar, tires, and other equipment on the tractor do not contact cutter frame or driveline.
7. Check all hoses and wires to be sure that they will not come in contact with rotating driveline.
8. With cutter resting on solid supports, power take-off disengaged, and blade rotation completely stopped:
   - Check for and remove foreign objects wrapped around blade spindles.
   - Check for nicked, bent, broken, and worn cutting blades. Replace or sharpen blades as required. Refer to **"Cutter Blade Maintenance"** on page 37.
9. Inspect Hydraulic hoses for wear, damage, and hydraulic leaks. See **"Avoid High Pressure Fluids Hazard"** on page 3. Replace damaged and worn hoses with genuine Land Pride parts.
10. Remove solid supports from under the deck.
11. Verify cutter height is set correctly. See **"Pull-Type Leveling & Cutting Height"** on page 28 or **"3-Point Leveling & Cutting Height"** on page 29

Continue inspection on next page.

The remaining inspections are made by engaging the power take-off to check for normal operation.

⚠ WARNING

To avoid serious injury or death:

- *Stop power take-off immediately if vibration continues after a few revolutions during start-up and anytime thereafter. Wait for all components to come to a complete stop before dismounting from tractor to check for probable causes. Make necessary repairs and adjustments before continuing.*
- *Some tractors are equipped with two power take-off speeds. Be certain your tractor's power take-off shaft is set-up to operate at 540 rpm. Do not exceed 540 rpm power take-off speed. Excessive speed can damage drive/driven components and increase the risk of a thrown object hazard.*

12. Start tractor, set throttle to idle or slightly above idle, and slowly engage power take-off. Initial start-up vibration is normal and should stop after a few revolutions. Stop power take-off rotation immediately if vibration continues.
13. Once cutter is running smoothly, slowly increase tractor power take-off speed to 540 rpm. Stop power take-off rotation immediately if vibration occurs.
14. Investigate cause of vibration and make repairs before putting cutter back into service.

Transporting

⚠ WARNING

To avoid serious injury or death:

- *Select a safe ground speed that will allow adequate control of steering and stopping. Never exceed 20 mph (32 km/h) with attached equipment. Rough terrain requires a slower speed.*
- *When traveling on public roadways, travel in such a way that faster moving vehicles may pass safely. Use hazard lights, clean reflectors, and a slow moving vehicle sign that is visible from the back to warn operators in other vehicles of your presence. Always comply with all federal, state, and local laws.*
- *Always disengage power take-off and wait for the driveline to stop rotating before raising the implement to the transport position.*

1. Make sure driveline does not contact tractor or cutter when raising cutter to transport position.
2. Reduce tractor ground speed when turning and leave enough clearance so cutter does not contact obstacles such as buildings, trees, or fences.
3. Limit transport speed to 20 mph. Transport only with a tractor of sufficient size and horsepower.
4. When traveling on roadways, transport in such a way that faster moving vehicles may pass you safely.
5. Shift tractor to a lower gear when traveling over rough or hilly terrain.

Blade Engagement & Disengagement

Cutter blades can lock-up against each other during start-up and shut-down especially if the tractor's power take-off engagement is **"INSTANT ON"** and **"INSTANT OFF"**. Following Blade Engagement and Blade Disengagement instructions below will help eliminate blade lock up.

Blade Engagement

1. Increase throttle to a speed just enough to get the cutter started without stalling tractor while slowly engaging power take-off drivelines. Use tractor's power take-off soft start option if available.
2. Ensure that all power shafts are rotating and that the cutter is not vibrating excessively after ramping up to power take-off speed for at least 3 seconds. If excessive vibration continues after 3 seconds at full power take-off speed, disengage power take-off immediately, shut down tractor, and remove switch key.
3. Check blades for a lock-up situation. Block cutter deck up before working under the unit. Unlock blades, remove support blocks, and repeat **"Blade Engagement"** instructions.

Blade Disengagement

1. Slowly decrease throttle speed until engine idle speed is reached and then disengage power take-off.
2. Engage tractor park brake, shut tractor engine off and remove switch key. Stay on tractor until blades have come to a complete stop.

Field Operation

DANGER

To avoid serious injury or death:

Clear area to be cut of debris and other unforeseen removable objects before cutting. Mark non-removable hazards such as tree stumps, post stubs, protruding objects, rocks, drop-offs, holes, etc. with a visible flag.

WARNING

To avoid serious injury or death:

Do not back-up the pull-type cutter into solid objects. Where the tongue is pinned to the deck will pivot upward causing equipment damage and loss of control.

IMPORTANT: Your cutter is equipped with free swinging cutting blades to reduce shock loads when striking obstacles. However, it is best to avoid striking obstacles to extend cutter and blade life.

Maintain correct power take-off speed. Loss of power take-off speed will allow blades to swing back resulting in ragged, uneven cutting.

NOTE: Do not cut in wet conditions. Wet material will build up on the deck underside creating poor discharge, high wear, and additional horsepower.

Periodically disengage power take-off, turn off tractor, remove key & check for objects wrapped around blade spindle. Block deck up before removing objects.

Frequently inspect cutter for loose bolts and nuts. Tighten all loose hardware as indicated in the **"Torque Values Chart"** on page 56.

1. Thoroughly inspect area to be cut for debris and unforeseen objects. Mark any potential hazards.
2. Follow **"Blade Engagement"** instructions on this page to start cutter blades turning.
3. Optimum ground speed depends on density of material being cut, horsepower rating of tractor, and terrain. Always operate tractor at cutter's full rated power take-off speed in a gear range that allows the cutter to make a smooth cut without lugging tractor down, usually between 2 to 5 mph (3 to 8 km/h).
4. Stop traveling and disengage power take-off after the first 50 feet (15 m) of cutting. Check cutter levelness and cutting height to make certain it is adjusted properly.
5. Do not engage power take-off with 3-point cutter fully raised.
6. Periodically disengage power take-off, shut down tractor, remove key, and check for foreign objects wrapped around the blade spindle. Block cutter deck up before removing objects.
7. Frequently inspect cutter for loose bolts and nuts. Tighten all loose bolts and nuts as indicated in the **"Torque Values Chart"** on page 56.
8. For additional information, see **"General Operating Instructions"** on page 36.

Turning Angles for Pull-Type Cutters

Refer to Figure 4-1 & Figure 4-2:

Avoid tractor-to-cutter turning angles exceeding 35 degrees if main driveline is a standard conventional drive shaft. The turning angle may be increased to 80 degrees if equipped with a constant velocity driveline shaft. These extreme angles are intended for intermittent usage only and not prolonged usage. Plan your field cutting to minimize the number of turns as well as extreme angles where turns are necessary.

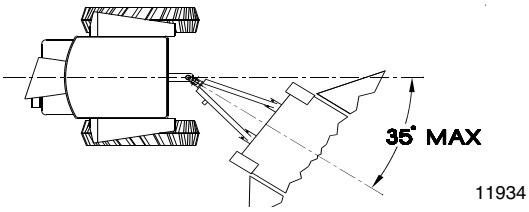

Conventional U-Joint Driveline
Figure 4-1

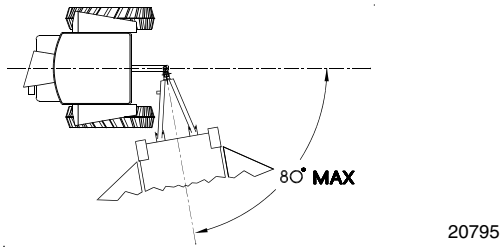

CV Driveline
Figure 4-2

Crossing Steep Ditches & Banks

Refer to Figure 4-3:

WARNING

To avoid serious injury or death:

Damage to the tractor's power take-off and/or driveline can cause driveline to come loose and cause bodily injury to the operator and others.

IMPORTANT: Always cross ditches and banks at a diagonal. Never cross straight across and never back into a ditch or bank.

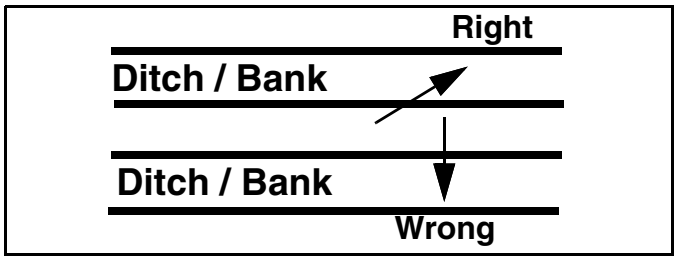

Crossing Steep Ditches and Banks
Figure 4-3

Cutting over ditches and backing up hills can tilt the cutter's back side up excessively resulting in "**Bottoming Out**" the driveline. Bottoming out is when the driveline shaft has shorten to the point it is pressing against the gearbox and tractor power take-off shafts. Once a driveline has bottomed out, it can not be shorten anymore without causing serious damage to the tractor power take-off components, cutter gearbox and driveline.

Do not operate a pull-type cutter at an angle exceeding 25 degrees up or down or at any angle that will force the driveline to bind and/or hit the tractor drawbar.

Unhook 3-Point Cutter

Refer to Figure 1-8 on page 20:

WARNING

To avoid serious injury or death:

Always disengage power take-off, put tractor in park or set park brake, shut tractor engine off, remove ignition key, and wait for blades to come to a complete stop before dismounting tractor.

1. See **"Long-Term Storage"** on page 46 if cutter is to be stored for a long time.
2. Park on a level solid surface and lower deck to ground level or onto support blocks.
3. Engage tractor park brake, shut tractor engine off, and remove ignition key. Stay on tractor until blades have come to a complete stop.
4. Disconnect driveline from tractor.
5. Unhook 3-point hitch from tractor and drive tractor forward several feet.
6. Reinstall hitch pins, linchpins, and hair pin cotters in cutter hitch for safe keeping.
7. Collapse driveline by pushing tractor end of driveline towards the cutter.
8. Rotate driveline storage hook down and place driveline in storage hook.

Unhook Pull-Type Cutter

Refer to Figure 1-7 on page 19:

WARNING

To avoid serious injury or death:

- *Always disengage power take-off, put tractor in park or set park brake, shut tractor engine off, remove ignition key, and wait for blades to come to a complete stop before dismounting tractor.*
- *Always place park jack on a firm surface or place a board under the park jack for additional support.*

1. See **"Long-Term Storage"** on page 46 if cutter is to be stored for a long time.
2. Park cutter on a level solid hard surface. Place tractor gear selector in park and set park brake.
3. Fully raise deck up to transport position. Add stroke control spacers to cylinder rod to prevent cylinder from retracting. See **"Hydraulic cylinder Instructions"** on page 28.
4. Remove parking jack (#1) from cutter deck and secure to cutter tongue by fully inserting jack locking pin (#2) through parking jack and mounting bracket.
5. Disconnect hydraulic hose (#9) from tractor. Store hose ends on cutter deck.
6. Disconnect hitch safety chain.
7. Disconnect driveline (#8) from tractor power take-off shaft.
8. Use parking jack (#1) to raise and lower cutter tongue to the height needed to disconnect clevis hitch from tractor drawbar.
9. Remove 1"-8 x 4 1/2" hex bolt (#3), flat washers (#5), and locknut (#4) from the clevis hitch (#6).

General Operating Instructions

Now that you have familiarized yourself with the Operator's Manual, completed the Operators Checklist, properly attached your cutter to your tractor, made the leveling adjustments, and preset your cutting height, you're almost ready to begin using your Rotary Cutter.

It's now time to do a running operational safety check. Shut the tractor off immediately and remove the key if at any time during this safety check you detect a malfunction in either the cutter or tractor. Make necessary repairs or adjustments before continuing on.

If you have a three-point hitch model make sure the tractor park brake is engaged, power take-off is disengaged, and cutter is resting on the ground. Start tractor and then back tractor throttle off until engine is at low idle. With tractor's rear hydraulic lift control lever, raise cutter to transport position making sure that the power take-off shaft is not in a bind and does not come in contact with the cutter frame. Lower cutter to the ground and, with tractor still at low idle, engage power take-off. If at this point everything is running smoothly, increase engine rpm until the tractor's engine reaches full power take-off operating speed. The RCR2510 will be 540 rpm power take-off speed. Slowly raise cutter to transport height to make sure the driveline does not bind or chatter. Then return engine to low idle, disengage power take-off, and position adjustable stops on tractor hydraulic lift lever so that the cutter can be consistently returned to the same cutting and transport height.

If you have a pull-type cutter, make sure the park brake is on and the cutter is on the ground in mowing position. Start the tractor and reduce engine speed to low idle. Engage the power take-off and increase engine rpm until you reach full power take-off speed. If everything is running smoothly your running safety check is complete and you may shut the tractor and cutter off.

You should now be ready to move to the cutting site to begin mowing. You should have inspected and should only be cutting in an area you are familiar with which is free of debris and unseen objects. Never assume an area is clear and extremely tall grass should be cut twice to detect potential hazards. In the event you do strike an object stop the tractor and cutter immediately to inspect the cutter and make any necessary repairs before resuming operation. It pays to inspect a new area and to develop a plan before you cut.

Normal mowing speed will be between 2-5 mph (3 to 8 km/h) and you will need to maintain 540 rpm power take-off speed to produce a clean cut, so make a tractor gear and range selection that will maintain this combination. Generally the quality of cut will be better at lower ground speeds and cutting denser ground cover will create the need to slow down. In certain conditions tractor tires will roll grasses down resulting in an uneven cutting height when the grass fails to rebound before being cut. When this happens you may need to reverse the cutting direction and double cut to achieve the desired finish. You will want to avoid very low cutting heights especially on extremely uneven terrain. Always cut downward on slopes and avoid crossing the face of steep slopes. Avoid sharp drops and cross diagonally through dips to prevent hanging up the tractor and cutter. Slow down in turns and avoid sharp turns if at all possible. Remember to look back often.

Now that you're prepared and well briefed you may begin cutting. Begin cutting by doing the following:

- Reducing the tractor's engine rpm
- Make sure the cutter is on the ground in cutting position
- Engage the power take-off
- Raise the engine rpm to the appropriate power take-off speed
- Begin cutting.

When it is difficult to make a wide turn and you need to reverse direction, the three point hitch models can be lifted into transport position to make a tight turn. Operators of pull-type models must plan ahead and choose a cutting pattern that allows him to make wider turns. Try increasing or decreasing ground speed to determine the effect on quality of cut. With a little practice you will be pleased with what you and your Land Pride cutter can do.

When you are done mowing, need to take a break, or just need to make a few adjustments to the cutter, remember to always do the following:

- Reduce the tractor's engine rpm
- Disengage the power take-off
- Stop on level ground
- Set the park brake
- Turn off the engine and remove the key
- Stay on the tractor until the cutter blades have come to a complete dead stop.

See **"Specifications & Capacities" and "Features & Benefits"** for additional information and performance enhancing options.

Maintenance

Proper servicing and adjustments are key to the long life of any implement. With careful inspection and routine maintenance, you can avoid costly downtime and repair.

Check all bolts after using the unit for several hours to be sure they are tight. Replace any worn, damaged, or illegible safety labels by obtaining new labels from your Land Pride dealer.

DANGER

To avoid serious injury or death:

- *Always disconnect the driveline from the power take-off shaft before servicing underside of cutter. The tractor can be started with the power take-off engaged.*
- *Always secure equipment with solid, non-concrete supports before working under it. Never go under equipment supported by concrete blocks or hydraulics. Concrete can break, hydraulic lines can burst, and/or hydraulic controls can be actuated even when power to the hydraulics is off.*

WARNING

To avoid serious injury or death:

- *Make sure controls are all in the neutral position or park before starting the power machine.*
- *Do not operate cutter with blades that are out-of-balance, bent, excessively worn, excessively nicked, or with blade bolts that are excessively worn. Damaged components can break at high speeds and be ejected in a hazardous manner.*
- *Do not attempt to straighten a bent blade or weld on a blade. Do not attempt to modify a blade such as hard surfacing, heat treating, cold treating, or by any other method. Always replace blades with genuine OEM blades to assure safety.*
- *Do not alter implement or replace parts on the implement with other brands. Other brands may not fit properly or meet OEM (Original Equipment Manufacturer) specifications. They can weaken the integrity and impair the safety, function, performance, and life of the implement. Replace parts only with genuine OEM parts.*
- *Buildup of debris around moving components and gearboxes is a fire hazard. Keep rotating parts and gearboxes free from debris.*
- *Improper oil level can cause bearing failure and be a fire hazard. Maintain proper gearbox oil level.*

Hydraulic System

One of the most important things you can do to prevent hydraulic system problems is ensure that your tractor's reservoir remains free of dirt and contamination.

Use a clean cloth to wipe hose ends before attaching them to your tractor. Replace your tractor’s hydraulic filter element at the prescribed intervals. These simple maintenances will go a long way to prevent occurrence of control valve and hydraulic cylinder problems.

Cutter Blade Maintenance

IMPORTANT: Replace cutting blades in pairs with genuine Land Pride blades only. Replacing single blades can result in an out-of-balance condition that will contribute to premature bearing wear/breakage and/or structural cracks in gearbox and/or deck.

Always inspect cutting blades before each use. Make sure they are properly installed and in working condition. Replace any blade that is damaged, worn, bent, or excessively nicked. Never straighten a bent blade! Small nicks can be ground out when sharpening. Remove cutting blades and sharpen or replace as follows:

1. Place tractor gear selector in park and/or set brakes, shut engine off and remove ignition key.
2. Disconnect main driveline from tractor power take-off and secure cutter deck in the up position with solid supports before servicing underside of cutter.
3. Inspect cutting blades. Make certain they are properly installed and are in good working condition. Replace any blade that is damaged, worn, bent, or excessively nicked. Small nicks can be ground out. Continue on next page.

Refer to Figure 5-1:

4. To remove blades from the cutter, remove access cover (#5).
5. Rotate blade bolt (#1) until aligned with access hole (A).
6. Unscrew locknut (#3) to remove cutting blade (#6). Blade bolt (#1) is keyed and will not turn freely.
7. Repeat steps 4 to 6 for the other blade.
8. Both blades should be sharpened at the same angle as the original cutting edge and must be replaced or re-ground at the same time to maintain proper balance. The following precautions should be taken when sharpening blades:
   a. Do not remove more material than necessary.
   b. Do not heat and pound out a cutting edge.
   c. Do not grind blades to a razor edge. Leave a blunt cutting edge approximately 1/16" (2 mm) thick.
   d. Always grind cutting edge so end of blade remains square to cutting edge and not rounded.
   e. Do not sharpen back side of blade.
   f. Both blades should weigh the same with not more than 1 1/2 oz (0.04 kg) difference. Unbalanced blades will cause excessive vibration which can damage gearbox bearings and create structural cracks.

Refer to Figure 5-2 on page 38:

9. Make certain when installing cutter blades that the blades on one spindle is positioned 90 degrees to the blades on the other spindle as shown in Figure 5-2.
10. Carefully check cutting edges of blades in relation to blade rotation to ensure correct blade placement. Blade rotation is counterclockwise on the left side and clockwise on the right side as shown. Airfoil (lift) must be oriented towards the top of the deck.

Refer to Figure 5-1:

⚠ WARNING

To avoid serious injury or death:

A locknut that has been removed can lose its thread locking properties. Reusing a used locknut can result in a thrown blade. Always use a new locknut when installing blades.

IMPORTANT: Examine blade bolts (#1) and flat washers (#2) for excessive wear and replace if worn.

11. Insert blade bolt (#1) through blade (#6), dish pan (#4), and flat washer (#2). Secure blade with a **new locknut (#3)** and torque to 450 ft-lb.
12. Repeat step 11 for the other blade.
13. Replace access cover (#5).
14. If replacing dishpan (#4), nut (#7) on gearbox output shaft should be torqued to 450 ft-lbs (610 Nm) minimum and cotter pin (#8) installed with both legs bent opposite directions around nut (#7).

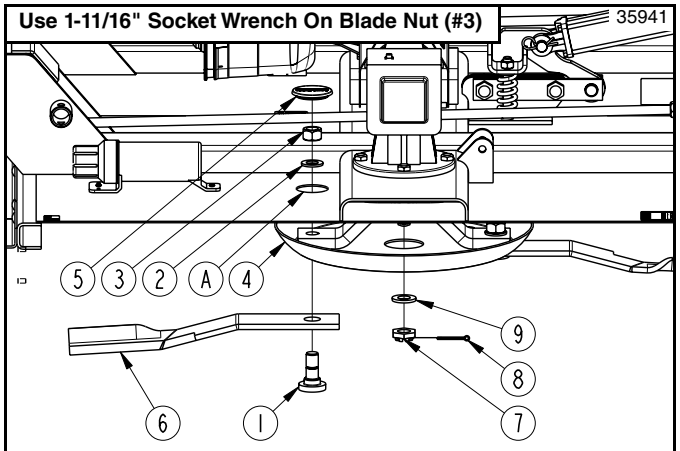

Land Pride Cutter Blade Parts

#	Part No.	Part Description
	318-586A	BLADE BOLT KIT . . (items 1, 2, & 3 below)
1	802-277C	BLADE BOLT 1 1/8-12 x 3 7/16 WITH KEY
2	804-147C	WASHER FLAT 1 HARD ASTMF436
3	803-170C	NUT HEX TOP LOCK 1 1/8-12 PLATE
4	312-881H	27 x 10G OVAL DISHPAN WELDMENT
5	840-273C	PLUG LP 3" ID RUBBER
6	820-168C	SEE LIST OF CUTTER BLADES BELOW

Land Pride List of Cutter Blades

Part No.	Part Description
820-137C	RCR2510 CUTTER BLADE 1/2 x 4 x 25 CCW
820-112C	RCR2510 CUTTER BLADE 1/2 x 4 x 25 CW

Optional Low Lift Cutter Blades

Part No.	Part Description
820-193C	RCR2510 BLADE 1/2X4X25 LL CCW
820-209C	RCR2510 BLADE 1/2X4X25 LL CW

Cutter Blade Assembly
Figure 5-1

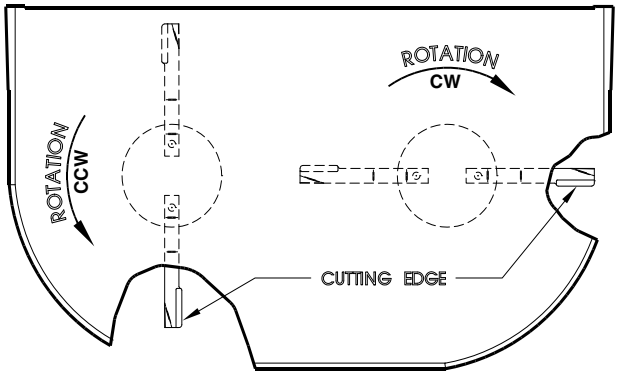

Blade Positioning and Rotational Directional
Figure 5-2

Driveline Maintenance

DANGER

To avoid serious injury or death:

- *Tractor power take-off shaft shield, driveline shields, and gearbox shaft shields must be installed and in good working condition to avoid driveline entanglement and projectiles flying off of the driveline.*
- *Always disconnect driveline from the tractor before servicing the drivetrain and components powered by the drivetrain. A person can become entangled in the drivetrain if the tractor is started and the power take-off is engaged.*

WARNING

To prevent serious injury or death:

- *Always follow "Tractor Shutdown Procedure" provided in this manual before dismounting the tractor.*
- *Do not operate a broken or bent driveline. Such a driveline will break apart while rotating at high speeds. Always remove the implement from use until the damaged driveline can be repaired or replaced.*

Before each use, check that all drivelines are securely fastened and that all driveline shields are in place, not broken, and in good working order. Replace drivelines and shields as needed. Order only genuine Land Pride parts from your local Land Pride dealer.

Before using the cutter for the first time, make sure the slip-clutches on the drivelines have gone through a run-in procedure. Thereafter, repeat run-in procedure whenever the cutter has sat for 30 days or more without use. Refer to **"Slip-Clutch Run-in Intervals"** and**"Slip-Clutch Identification"** on this page.

Slip-Clutch Run-in Intervals

WARNING

To avoid serious injury or death:

- *A slip clutch that has been in use or has slipped for as little as only two or three seconds during run-in may be too hot to touch. Allow a hot clutch to cool before working on it.*

IMPORTANT: Moisture on the slip-clutch allows friction disks to slip easily and overtime, can cause oxidation on the friction disks and adjacent plates. Oxidation can prevent the disks from slipping causing damage to the driveline and drivetrain. Damage due to the friction disks seizing is NOT covered under the warranty.

The purpose of the slip-clutch is to protect the drive train from shock loads and damage during field operations. To ensure each slip-clutch functions properly, they should go through a run-in procedure to remove any oxidation that may have accumulated on the friction surfaces. Preform slip-clutch run-in procedures:

- Prior to initial operation.
- After 30 days of inactivity.
- At the beginning of each season.
- When oxidation forms on the friction plates.

Visually inspect the slip-clutches for moisture, oxidation, loose components, broken components, friction disk wear, etc:

- During the first hour of operation.
- Periodically each week.

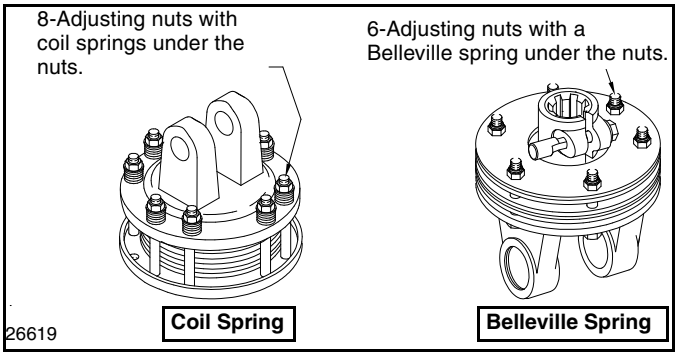

Slip-Clutch Identification
Figure 5-3

Slip-Clutch Identification

Refer to Figure 5-3:

Identify which clutch type your driveline has and then continue with:

- **"Slip-Clutch With Coil Springs"** on page 40,.
- **"Slip-Clutch With Belleville Spring"** on page 42.

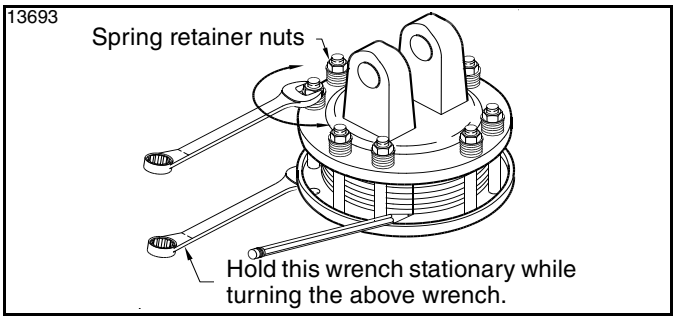

Slip-Clutch Run-in With Coil Springs
Figure 5-4

Slip-Clutch With Coil Springs

Refer to Figure 5-4:

This clutch can be identified by its eight coil springs (#2) on the yoke end of the clutch. The coil springs are tightened to a specified height creating the right amount of force on the friction disks to protect the drive train from shock loads.

The slip-clutch should periodically go through a run-in procedure to ensure it functions properly. Refer to **"Slip-Clutch Run-in Intervals"** on page 39.

Slip-Clutch Run-in With Coil Springs

Refer to Figure 5-4:

1. Using a pencil or other marker, scribe a line across the exposed edges of the clutch plates and friction discs.
2. Carefully loosen each of the eight spring retainer nuts by exactly two revolutions. It will be necessary to hold the hex head end of the retainer bolt in order to **count the exact number of revolutions**.
3. Make sure the area is clear of all bystanders and the machine is safe to operate.
4. Start tractor and engage power take-off for two to three seconds to permit slippage of the clutch surfaces. Disengage power take-off, then re-engage a second time for two to three seconds. Disengage power take-off, shut off tractor, and remove ignition key. Wait for all components to come to a complete stop before dismounting from the tractor.
5. Inspect clutch to ensure all scribed markings made on the clutch have changed position. Skip to step 7 if all friction desks have slipped.
6. The clutch must be disassembled to separate the friction discs if any two marks are still aligned. Refer to **"Slip-Clutch Breakdown With Coil Springs"** on this page.
7. Tighten the eight spring retainer nuts two revolutions to restore the clutch to its original pressure setting.
8. Allow time for the clutch to cool down to ambient temperature before operating it again. The clutch is now ready for use.

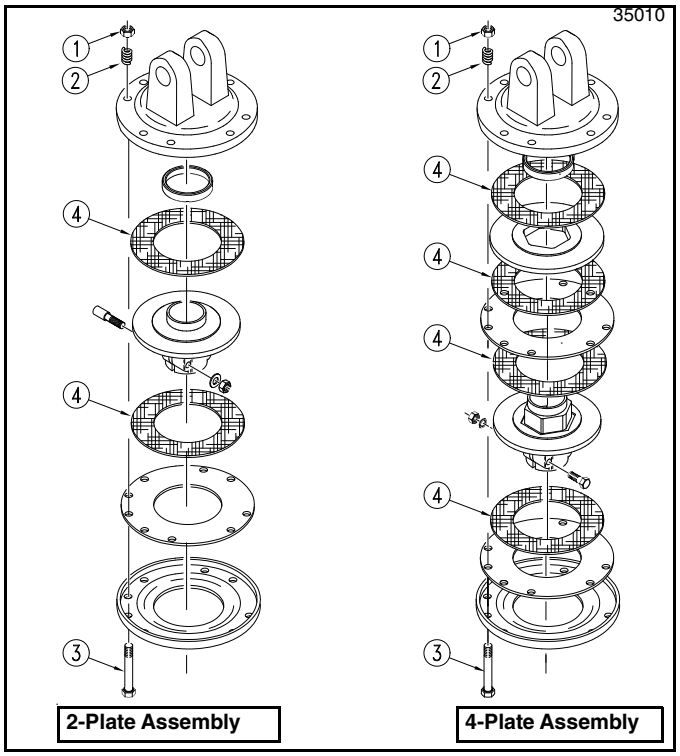

Slip-Clutch Breakdown With Coil Springs
Figure 5-5

Slip-Clutch Breakdown With Coil Springs

Refer to Figure 5-5:

The clutch must be disassembled into its separate friction disks if clutch run-in procedure indicated that one or more friction disks did not slip.

Clutch Disassembly

Disassembly of the clutch is simply a matter of removing the spring retainer nuts (#1), springs (#2) and bolts (#3) from the assembly. Each friction disc (#4) must then be separated from the metal surface adjacent to it.

Clutch Inspection

Inspect all parts for excessive wear and condition. Clean all parts that do not require replacement.The original friction disc thickness is 1/8" (3.2 mm) and should be replaced if thickness falls below 3/64" (1.1 mm). If the clutch has slipped to the point of "smoking", the friction discs may be damaged and should be replaced. Heat build-up may also affect yoke joints.

Clutch Assembly

Refer to Figure 5-5:

Install new friction discs if needed and reassemble all components in proper order:

1. Reassemble each friction disc (#4) next to the metal plate it was separated from.
2. Install bolts (#3) through the end plates and intermediate plates as shown.
3. Place springs (#2) over the bolts and secure with nuts (#1).

24600

A = Measured length of each spring before disassembling slip-clutch.

Use "A" dimension in table below if measurements were not taken before disassembling slip-clutch.

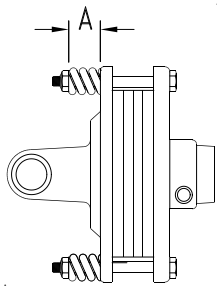

RCR 2510

Driveline No.	Driveline Location	PTO Speed	Cat No.	A (inches) Spring Height
826-215C 826-220C 826-225C	Main Jack Shaft Stub Shaft	540	4	S/N 566919+ 1.18" (30 mm) S/N 566918- 1.12" (28 mm)
826-872C 826-880C 826-881C	Main Jack Shaft Stub Shaft	540	4	1.27" (32.2 mm)

Clutch Adjustment
Figure 5-6

Adjust Coil Spring Height

Refer to Figure 5-6:

Progressively tighten each spring retainer bolt until correct spring height "A" is reached.

If preferred, a spring height gauge can be made to assist adjusting the height of each spring. For detailed instructions, refer to **"Coil Spring Height Gauge"** on this page.

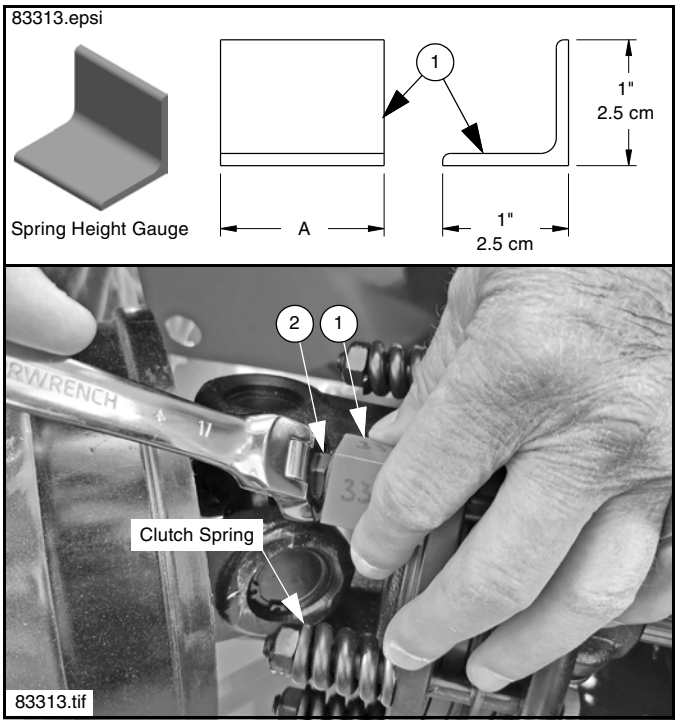

Coil Spring Height Gauge
Figure 5-7

Coil Spring Height Gauge

Refer to Figure 5-6:

A spring gauge can be made to measure the spring height. This gauge will save time tightening the springs and can be reused each time the spring nuts are loosened and re-tightened.

1. Cut a 1" x 1" angle iron (#1) to length "A" provided in Figure 5-6. (Angle iron supplied by customer.)
2. Place fabricated gauge (#1) over a spring and its end against the clutch plate.
3. Tighten spring nut (#2) until the bottom of the nut is flush with the top of the angle gauge.
4. Repeat steps 2-3 on each clutch spring.

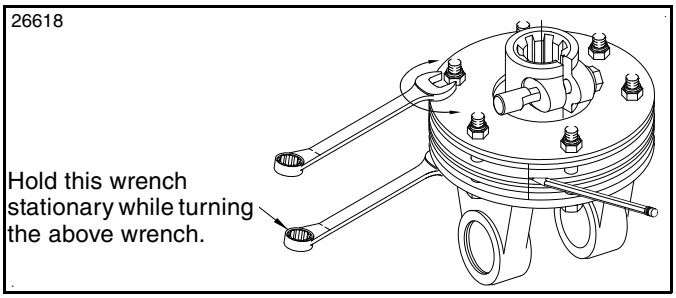

Slip-Clutch Run-in With Belleville Spring
Figure 5-8

Slip-Clutch With Belleville Spring

Refer to Figure 5-9:

This clutch can be identified by its Belleville spring (#2) and its two friction disks (#4). The Belleville spring is compressed against drive plate (#3) to a specified gap to create the right amount of force on the friction disks.

The slip-clutch should periodically go through a run-in procedure to ensure it functions properly. Refer to **"Slip-Clutch Run-in Intervals"** on page 39 to know when to preform a clutch run-in procedure.

Slip-Clutch Run-in With Belleville Spring

Refer to Figure 5-8:

1. Use a pencil or other marker to scribe a line across the exposed edges of the drive plates and friction disks.
2. With two 17 mm wrenches, carefully loosen each of the six locknuts by exactly 1 revolution. It will be necessary to hold the head end of the bolt stationary in order to **count exact number of revolutions**.
3. Make sure the area is clear of all bystanders and machine is safe to operate.
4. Start tractor. With engine set on idle, engage power take-off for 2-3 seconds to permit friction disk slippage. Disengage power take-off, shut tractor off, and remove ignition key. Wait for all components to stop moving before dismounting from the tractor.
5. Inspect clutch to ensure the scribed markings made on the drive plates and friction desks have changed positions. Skip to step 8 if all friction desks have slipped. If any two marks are still aligned, continue with step 6 below.
6. Loosen locknuts one more complete revolution. Make sure locknuts have full thread engagement and then repeat steps 4-5.
7. The clutch must be disassembled if any two marks are still aligned. Refer to **"Slip-Clutch Breakdown With Belleville Spring"** on this page.
8. Tighten each of the six locknuts back to their original position to restore clutch pressure.
9. Allow time for the clutch to cool down to ambient temperature before operating it again. The clutch is now ready for use.

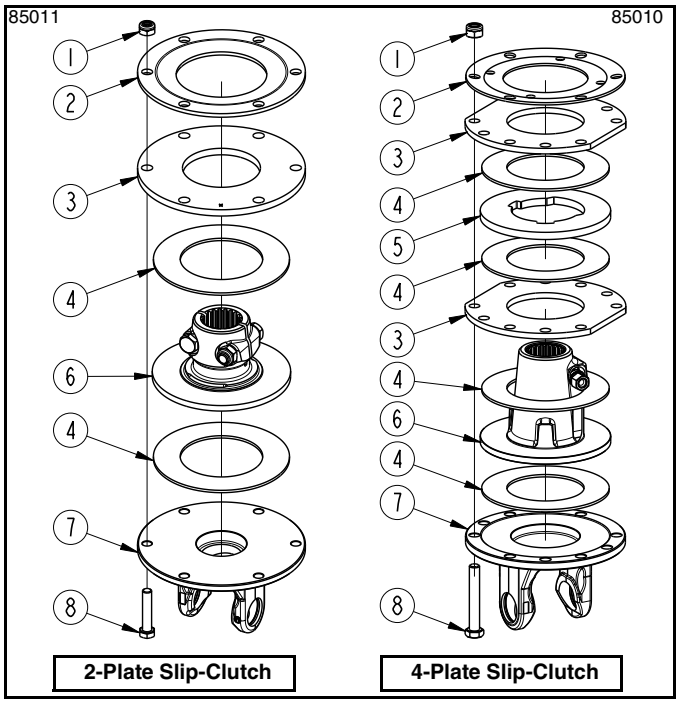

Slip-Clutch Breakdown With Belleville Spring
Used With Driveline 826-881C & 826-882C
Figure 5-9

Slip-Clutch Breakdown With Belleville Spring

Refer to Figure 5-9:

If clutch run-in procedure indicated that not all friction disks slipped, then the clutch must be disassembled to separate the friction disks from the drive plates.

Clutch Disassembly

IMPORTANT: Do not loosen or tighten fasteners with an impact tool. Use only hand wrenches.

IMPORTANT: Do not remove any locknuts (#1) from bolts (#8) until after the spring pressure against all six nuts has been removed.

1. Unscrew locknuts (#1) an equal amount until all Belleville spring tension is removed. Do not remove locknuts until tension against all nuts have been removed.
2. Remove nuts (#1), Belleville spring (#2), and bolts (#8).
3. Each friction disc (#4) must then be separated from the metal surface adjacent to it.

Clutch Inspection

IMPORTANT: Make sure all metal friction surfaces are clean and free of lubricants.

Inspect all parts for excessive wear and condition. Clean all parts that do not require replacement.The original friction disk thickness is 0.118" (3 mm) and should be replaced if thickness falls below 0.059" (1.5 mm). If the

clutch has slipped to the point of “smoking”, the friction disks may be damaged and should be replaced. Heat build-up may also affect the yoke joints.

Clutch Assembly

Refer to Figure 5-9 on page 42:

IMPORTANT: Do not loosen or tighten fasteners with an impact tool. Use only hand wrenches.

IMPORTANT: Make sure inner circle of Belleville spring (#2) makes contact with drive plate (#3). Flip Belleville spring over if there is a gap.

1. Reassemble each friction disk (#4) next to the metal plate it was separated from as shown.
2. Place inside circle of Belleville spring (#2) against drive plate (#3).
3. Insert bolts (#8) through yoke flange (#7), drive plate(s) (#3), and belleville spring (#2) as shown.
4. Secure bolts (#8) with locknuts (#1). Draw lock nuts up snug, do not tighten at this time.

Adjust Belleville Spring Gap

Refer to Figure 5-10:

NOTE:

Two plate slip-clutch: Tightening locknuts (#1) one revolution will compress the spring 1.5 mm (0.059") and 1/6 of a turn, 0.25 mm (.01”).

Four plate slip-clutch: Tightening locknuts (#1) one revolution will compress the spring 1.75 mm (0.069") and 1/6 of a turn, 0.29 mm (.011”).

IMPORTANT: Measurement “A” is an approximate gap dimension. Variations in spring force and friction materials may cause differences in torque values.

IMPORTANT: If a torque setting higher than the minimum gap is needed, then tighten each locknut 1/6 of a turn more. Do not set gap “A” smaller than:

- 4.5 mm (0.177") if two plate slip-clutch
- 5.0 mm (0.197") if four plate slip-clutch

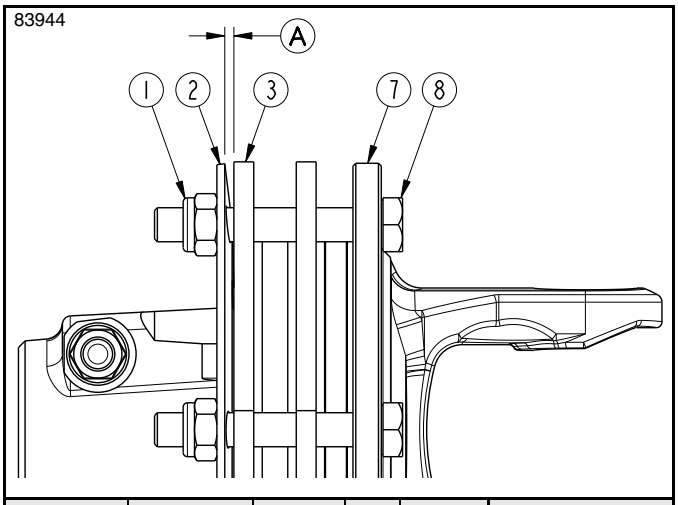

Driveline No.	Driveline Location	PTO Speed	Cat No.	No of Plates	"A" Spring Height
826-882C	Jack Shaft	540	4	2	5 mm (0.197")
826-881C	Stub Shaft	540	4	4	5.5 to 6 mm 0.217" to 0.236"

Adjust Belleville Spring Gap
Four Plate Slip-Clutch Shown
Figure 5-10

There are two methods for adjusting the Belleville spring gap to dimension “A”.

Adjustment Method #1

1. Tighten locknuts (#1) in a crisscross pattern until Belleville spring (#2) is tight against drive plate (#3) at all six nut locations.
2. Back-up each locknut (#1):
   - 3 1/3 revolutions if slip-clutch is a two plate clutch.
   - 3 1/3 revolutions if slip-clutch is a four plate clutch.
3. Check dimension “A” at each locknut (#1) to verify the gap is set at “A” dimension.

Adjustment Method #1

1. Draw all six locknuts (#1) up snug against Belleville spring (#2).
2. Tighten each nut one full revolution. Repeat step 2 until gap “A” is less than:
   - 5.5 mm (0.217") at each locknut (#1) if slip-clutch is a two plate clutch.
   - 6.5 mm (0.256") at each locknut (#1) if slip-clutch is a four plate clutch.
3. Continue tightening each locknut a fraction of a turn such as 1/6 of a turn until the correct spring gap “A” is reached.
4. Check the gap at each locknut (#1) to verify the spring gap is set at dimension “A”.

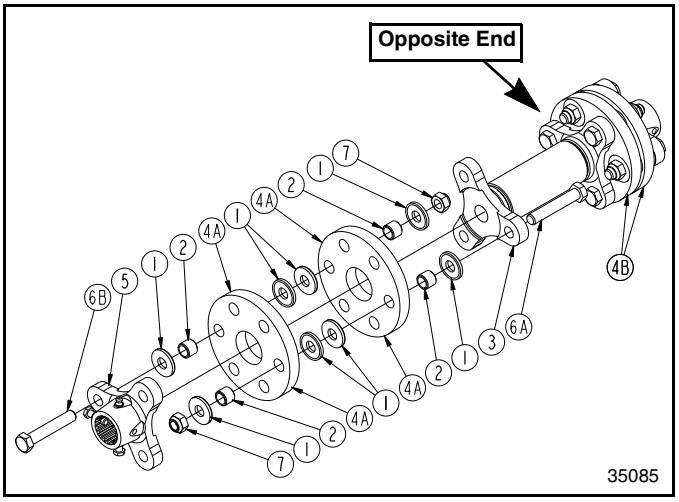

Dual End Flex Couplers
Figure 5-12

RCR2510 Dual End Flex Couplers

Refer to Figure 5-12:

Replace four rubber discs (#4), (Land Pride Part No. 19-075), as follows. If additional repair parts are required, refer to Land Pride's Parts Manual 327-088P.

IMPORTANT: Make sure beads on beaded washers (#1) are always facing rubber discs in assembly.

1. Attach rubber discs (#4A) to the double flex yoke (#3) with 3 bolts (#6A), 12 beaded washers (#1), 6 bushings (#2), and 3 nylock nuts (#7) as shown. Make sure beads on the beaded washers are facing the rubber discs. Do not tighten nuts.
2. Attach yoke end (#5) to rubber discs (#4) with 3 bolts (#6B), 12 beaded washers (#1), 6 bushing (#2), and 3 nylock nuts (#7) as shown. Make sure beads on the beaded washers are facing the rubber discs. Do not tighten nuts.
3. Tighten nuts (#7) evenly with nuts torqued 35 to 40 ft-lb (47 to 54 Nm). Beaded washers (#2) should be embedded halfway into the rubber disc.
4. Repeat steps 1-3 to install rubber discs (#4B) on opposite end of flex coupler.

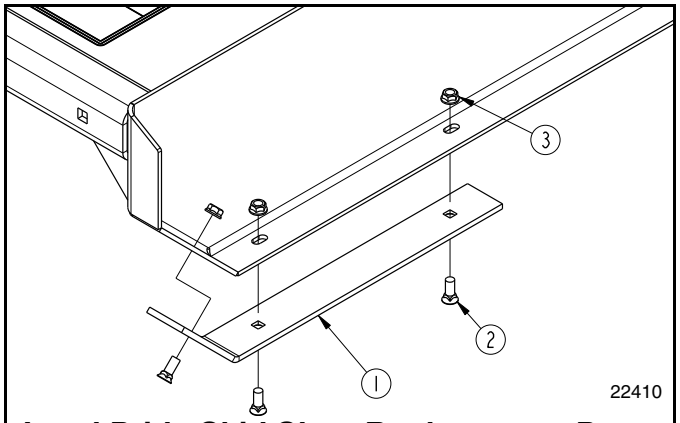

Land Pride Skid Shoe Replacement Parts

Part No.	Description
312-602D	SKID SHOE
802-603C	PLOW 3/8-16 x 1 GR5
803-198C	NUT HEX WHIZ 3/8-16 PLT

Skid Shoe Replacement
Figure 5-13

Skid Shoe Maintenance

Refer to Figure 5-13:

WARNING

To avoid serious injury or death:

Excessive wear on skid shoes can damage side panels, cause inadequate operation of cutter, and create a safety hazard. Always replace skid shoes at the first sign of wearing thin.

There are two skid shoes. Check both skid shoes for wear and replace if needed. Order only genuine Land Pride parts from your Land Pride dealer.

1. Remove 3/8" hex whiz nuts (#3), 3/8" plow bolts (#2), and skid shoe (#1) as shown.
2. Plow bolts should be checked for wear and replaced if necessary.
3. Attach new skid shoe (#1) to cutter with existing 3/8" plow bolts (#2) and secure with 3/8" hex whiz nuts (#3). Tighten nuts to the correct torque.
4. Repeat on opposite side.

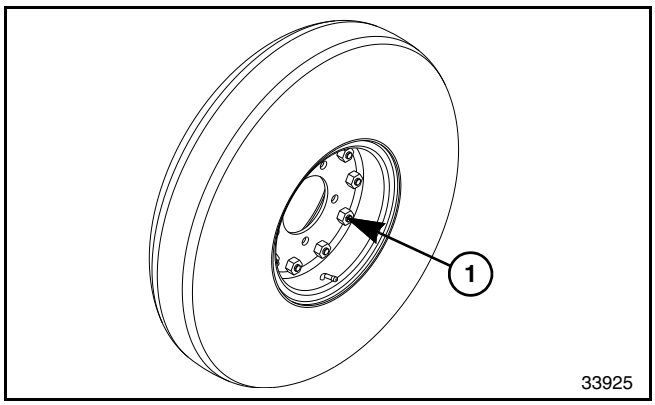

Air Filled Airplane Tires with split Rims
Figure 5-14

Tires

DANGER

To avoid serious injury or death:

Always release all air pressure in air-filled airplane tires before removing hardware bolting two-piece wheel rims together. Not releasing the air pressure can cause the wheel rims to blow apart instantly.

WARNING

To avoid serious injury or death:

- *Tire changing can be dangerous and should be performed by trained personnel using correct tools and equipment. When removing and installing wheels, use wheel handling equipment adequate for the weight involved.*
- *When inflating tires, use a clip-on chuck and extension hose long enough to allow you to stand to one side and NOT in front of or over the tire assembly. Use a safety cage if available. Do not over inflate tires.*
- *Do not weld on or heat a rim. Air pressure inside the tire can increase enough to cause an explosion. High heat can weaken and/or warp the rim, damage the tire, and destroy foam filling inside a tire.*

1. Check tires for low air pressure, missing nuts, missing lug bolts, wear, separated rubber, and bent, broken, or cracked wheel rims.
2. Inflate air filled tires to the proper pressure. Refer to **"Tire Inflation Chart"** on page 56.

Refer to Figure 5-14:

3. Replace wheel rims and tires as needed with genuine Land Pride parts. Do not loosen split rim hardware (#1) until all air pressure in the tire has been removed.

Long-Term Storage

Clean, inspect, service, and make necessary repairs to the implement when storing it for long periods and at the end of the season. This will help to ensure the unit is ready for field use the next time you hook-up to it.

DANGER

To avoid serious injury or death:

- *Always disconnect the driveline from the power take-off shaft before servicing drivetrain and cutter blades. The power take-off can be engaged if the tractor is started.*
- *Always secure equipment with solid, non-concrete supports before working under it. Never go under equipment supported by concrete blocks or hydraulics. Concrete can break, hydraulic lines can burst, and/or hydraulic controls can be actuated even when power to the hydraulics is off.*

1. Clean off any dirt and grease that may have accumulated on the cutter and moving parts. Scrape off compacted dirt from the bottom of deck and then wash surface thoroughly with a garden hose. A coating of oil may also be applied to the lower deck area to minimize oxidation.
2. Check blades and blade bolts for wear and replace if necessary. See **"Cutter Blade Maintenance"** on page 37.
3. Inspect for loose, damaged or worn parts and adjust or replace as needed.
4. Repaint parts where paint is worn or scratched to prevent rust. Ask your Land Pride dealer for aerosol touch-up paint. Paint is also available in touch-up bottles with brush, quarts, and gallon sizes by adding TU, QT, or GL to the end of the aerosol part number.

Land Pride Aerosol Touch-up Paint

Part No.	Part Description
821-011C	PAINT LP BEIGE SPRAY CAN
821-054C	PAINT MEDIUM RED SPRAY CAN
821-058C	PAINT GREEN SPRAY CAN
821-066C	PAINT ORANGE SPRAY CAN
821-070C	PAINT GP GLOSS BLACK SPRAY CAN

5. Replace all damaged or missing decals.
6. Lubricate as noted in **"Lubrication Points"** starting on page 47.
7. Store cutter on a level surface in a clean, dry place. Inside storage will reduce maintenance and make for a longer cutter life.
8. Follow all unhooking instructions on page 35 when disconnecting tractor from cutter.

Ordering Replacement Parts

Land Pride offers equipment in factory standard Beige with black highlights. This implement may also be purchased in Orange, Green, or Red.

When ordering an optional color, the suffix number corresponding to the color must be added at the end of the part number. Parts ordered without the suffix number will be supplied in factory standard colors.

81 . . . . . Green **83 . . . . . Red**
82 . . . . . Orange **85 . . . . . Black**

For example, if you are ordering a replacement part with part number 555-555C and the existing part is orange, then add the suffix 82 to the end of the number to make the part number read 555-555C82.

Lubrication Points

Lubrication Legend

Multi-purpose spray lube

Multi-purpose grease lube

Multi-purpose oil lube

50 Hrs — Intervals in hours at which lubrication is required

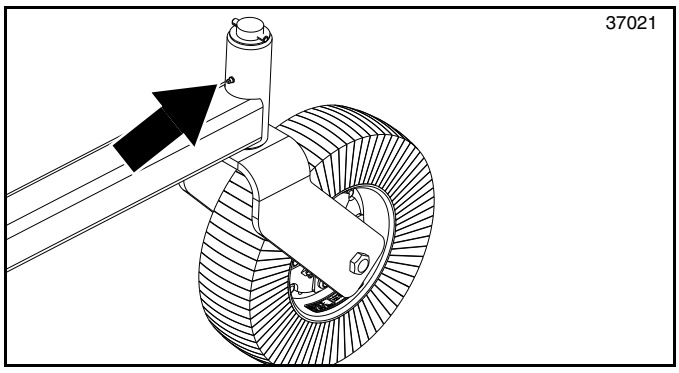

24 Hours

3-Point Tailwheel Spindle Tube

Lift-Type Cutter

Type of Lubrication: Grease

Quantity = 6 pumps

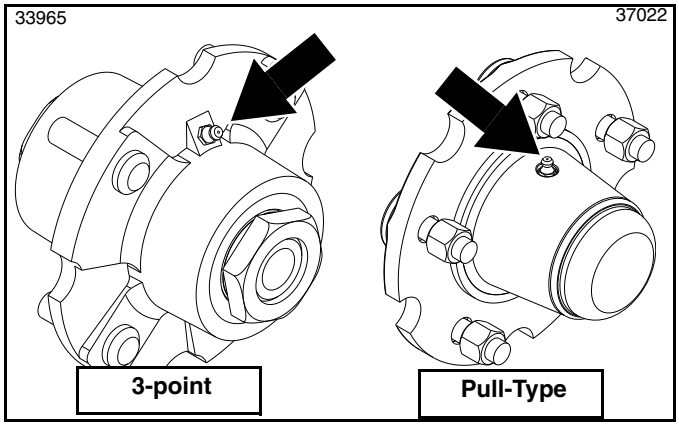

8 Hours

Tailwheel Hub

The tailwheel hub is equipped with a relief hole located directly opposite the grease fitting. The relief hole releases pressure from inside the hub casting when it is greased. The hub should be greased until grease purges from the relief hole.

Type of Lubrication: Multi-purpose Grease

Quantity = Until grease purges from the relief hole

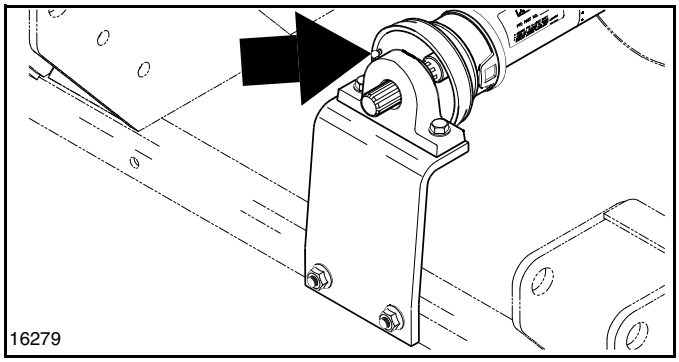

8 Hours

Pillow Block Bearing (Pull-Type Cutter)

(RCR2510)

Type of Lubrication: Grease

Quantity = As required

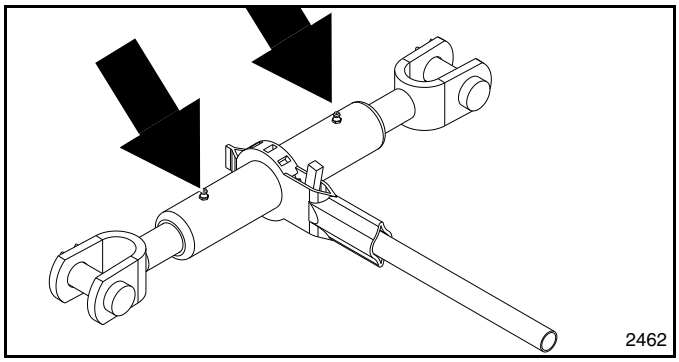

As Required

Ratchet Jack

Type of Lubrication: Multi-Purpose

Quantity = As required

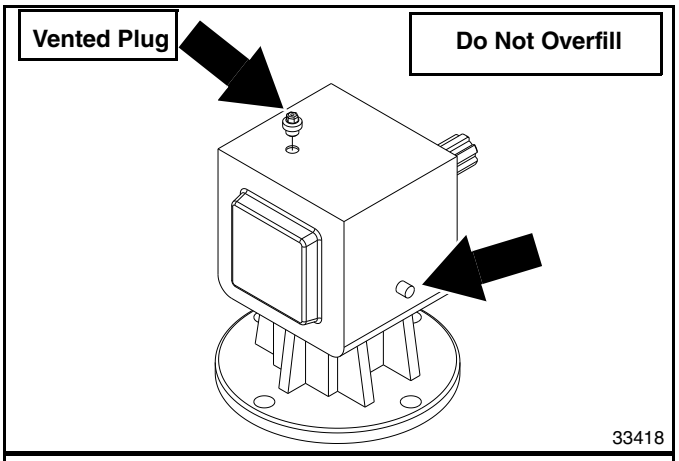

IMPORTANT: This implement is shipped with a vented dipstick packaged in the Operator's Manual bag and should have been installed in the gearbox by your dealer. Please consult your dealer if vented dipstick was not included.

NOTE: Use a suction or siphon pump to drain gearbox of oil when there is not an oil drain plug.

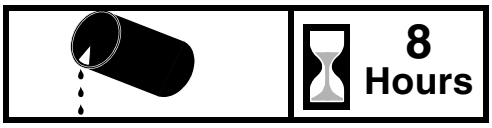

Gearbox

NOTE: Do not overfill! Cutter should be level when checking oil. Oil expands when hot, therefore, always check oil level when cold.

Remove side oil plug. If oil is below bottom of plug hole, add recommended gear lube through top vented plug hole until oil flows out of side plug hole. Reinstall and tighten side oil plug and top vented plug.

Type of Lubrication: 80-90W EP Gear Lube

Quantity = Fill until oil reaches top mark on dipstick or begins to flow out side plug hole in gearbox.

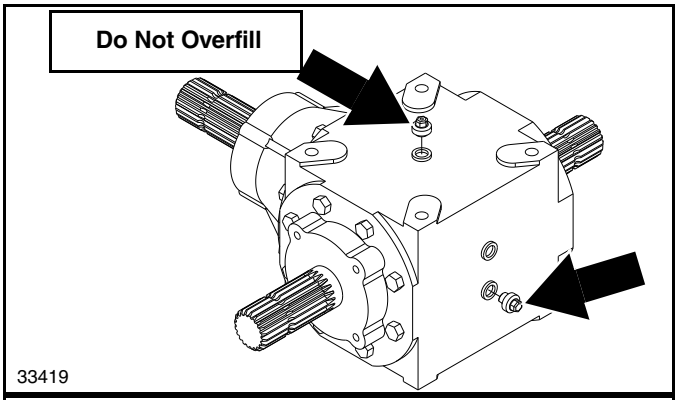

IMPORTANT: This implement is shipped with a vented dipstick packaged in the Operator's Manual bag and should have been installed in the gearbox by your dealer. Please consult your dealer if vented dipstick was not included.

NOTE: Use a suction or siphon pump to drain gearbox of oil when there is not an oil drain plug.

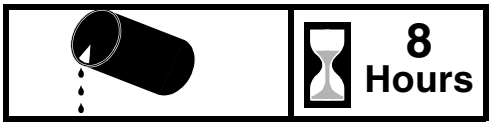

T-Gearbox

Check oil level in gearbox by removing lower rear plug in gearbox case. If oil is below lower rear plug hole, add recommended gear lube through top plug hole until oil flows out of rear plug hole. Reinstall oil plugs and tighten.

NOTE: Do not overfill! Cutter should be level when checking oil.

Type of Lubrication: 80-90W EP Oil

Quantity = Fill until oil flow from upper rear port of gearbox case.

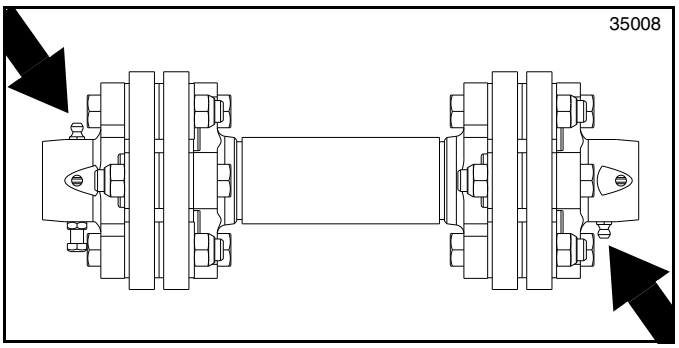

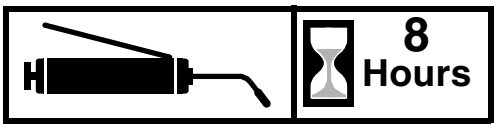

Dual End Flex Coupler

Type of Lubrication: Grease

Quantity = As required

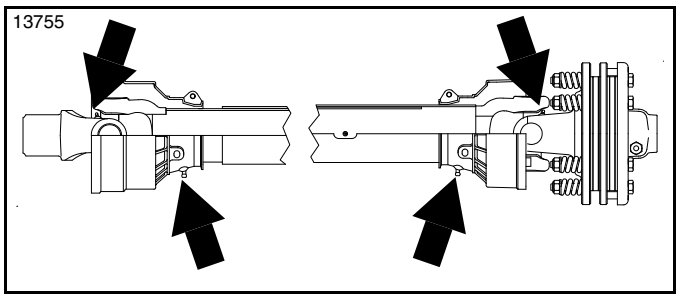

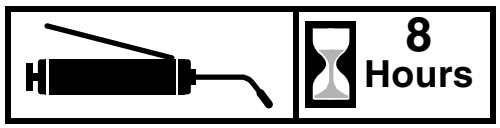

Driveline U-Joints

Type of Lubrication: Grease

Quantity = 6 pumps

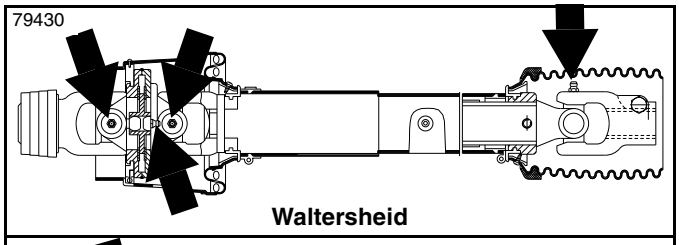

Waltersheid

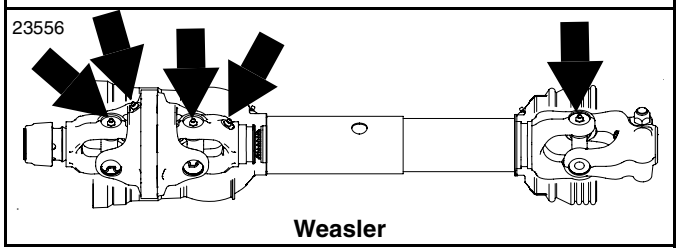

Weasler

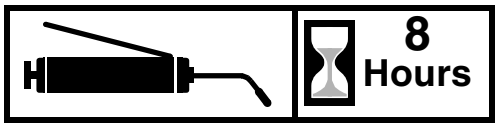

CV Driveline U-Joints & Profile Shields

Type of Lubrication: Grease

Quantity = 6 pumps

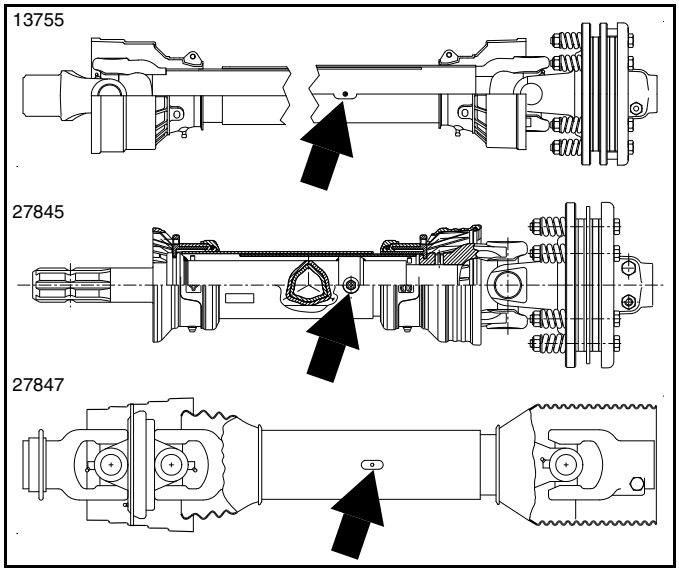

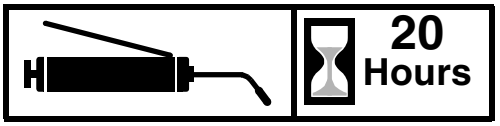

Driveline Profiles With Grease Zerk

Type of Lubrication: Grease

Quantity = 6 pumps

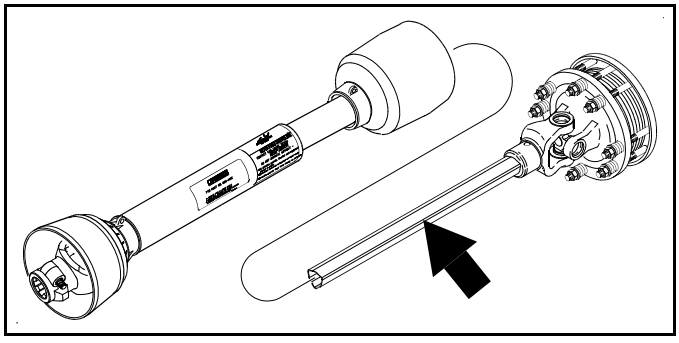

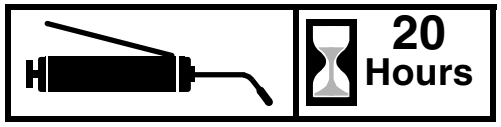

Driveline Profiles Without Grease Zerk

Quantity = Clean & coat the inner tube of the driveline with a light film of grease and then reassemble.

RCR2510 Model

Specifications & Capacities		
	Units	RCR2510 (540 rpm)
Machine weight (With front and rear chain shields)	lbs (kg)	Lift-type 1,750 (794) Pull-type 2,035 (923)
Hitch		Lift-type Category 2 & 3 Quick-Hitch adaptable Pull-type - w/dual level rods
Pull type tongue weight	lbs (kg)	872 (396)
Cutting width	inches (m)	9'-10" (3.00)
Overall width	inches (m)	10'-3' 1/2" (3.15)
Overall length	inches (m)	Lift-type: 9'-0" (2.74) Pull-type: 12'-9 1/2" (3.91)
Deck height	inches (cm)	9 5/8" (24.4 cm)
Cutting height	inches (cm)	2-10 1/2 (5.1-26.7)
Cutting capacity		1 1/2 (3.8 cm)
Tractor Hp rating	hp (kW)	Lift-type: 60-110 (44.7-82) Pull-type: 50-110 (37.3-82)
Power take-off speed		
Gearbox horsepower rating	hp (kW)	Center - 100 (74.6) Outboard 60 (44.7)
Gearbox (Speed up beveled gears)		540 rpm power take-off driven gearbox Cast iron housing, beveled gears
Gearbox lubrication		80-90w EP
Gearbox oil capacity **End boxes** **T-box**	pints (L)	2.5 (1.18) 4.5 (2.13)
Gearbox Input/ output shaft size		Input shaft = 1 3/4" - 20 spline Output shaft = 2" dia.
Deck material thickness	gauge (mm)	10 (3.4)
Deck side skirt thickness	inches (mm)	3/16 (5)
Skids		Replaceable
Stump jumper	inches (mm)	Round pan 3/16 (5)
Blades (2)		1/2" x 4" Heat treated Free-swinging suction blades
Blade bolts		Keyed with harden flat washer and locknut
Blade tip speed	fpm (mps)	540 rpm 17,749 (90.2)
Driveline		Cat 4 w/equal angle u-joint or Constant velocity u-joint
Driveline protection		540 rpm - 4 plate slip-clutch
Tailwheel option **Lift-type (2 ea.)** **Pull-type (2 ea.)**		4" x 8" x 15 1/4" Laminated 6" x 9" x 21" Laminated or 24" recap aircraft tires
Optional safety shields		Front & rear chain/ front & rear rubber

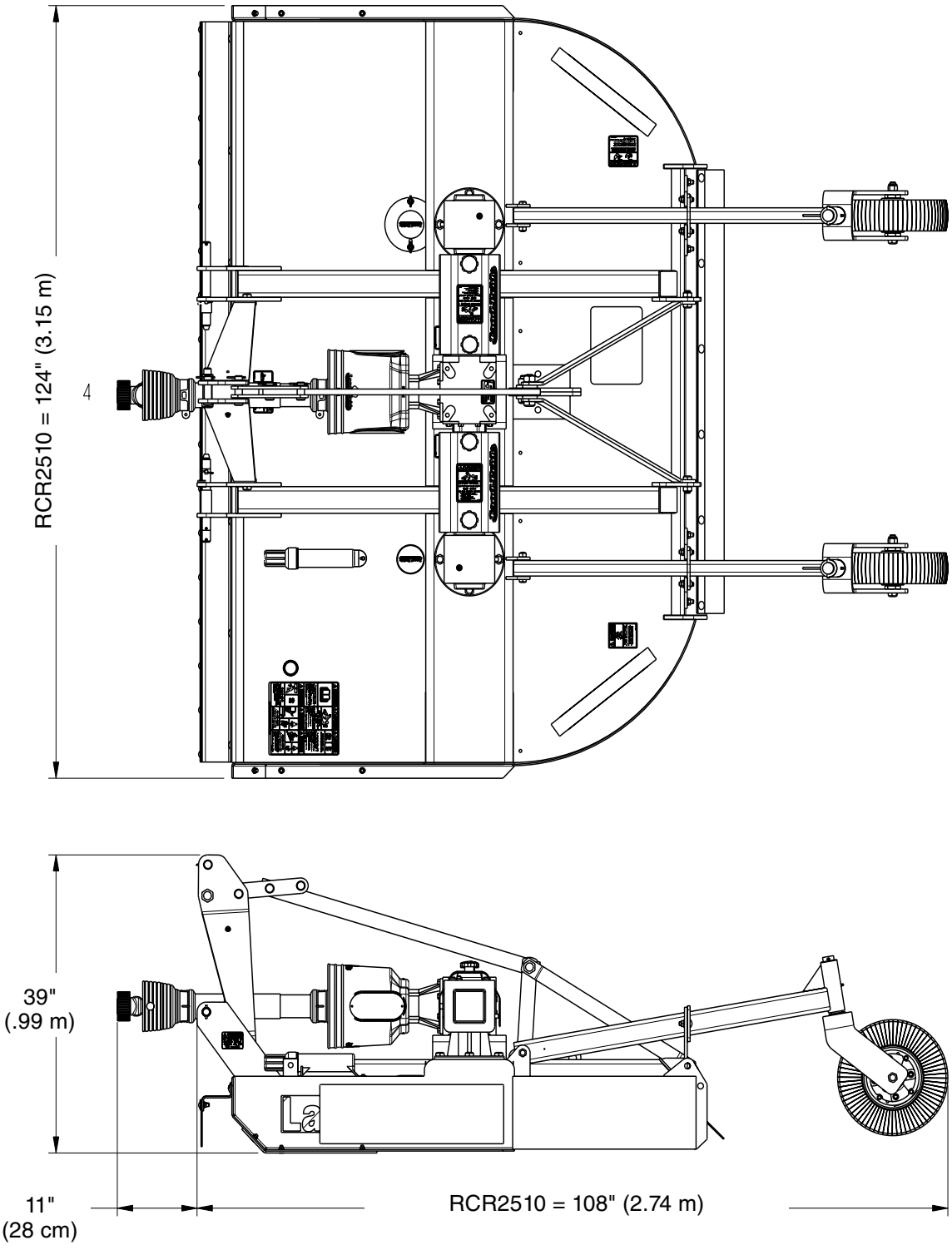

3-Point Rotary cutter

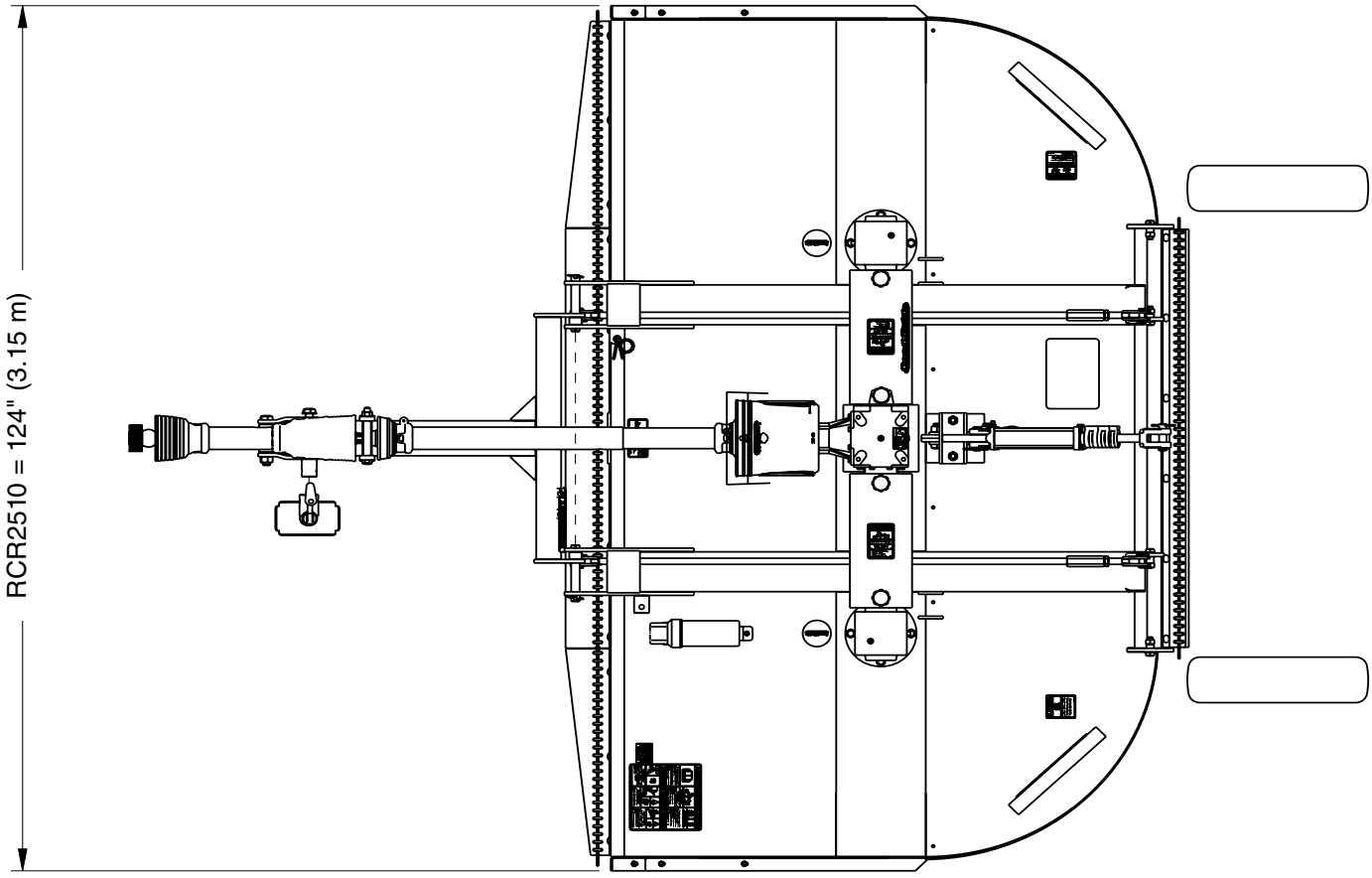

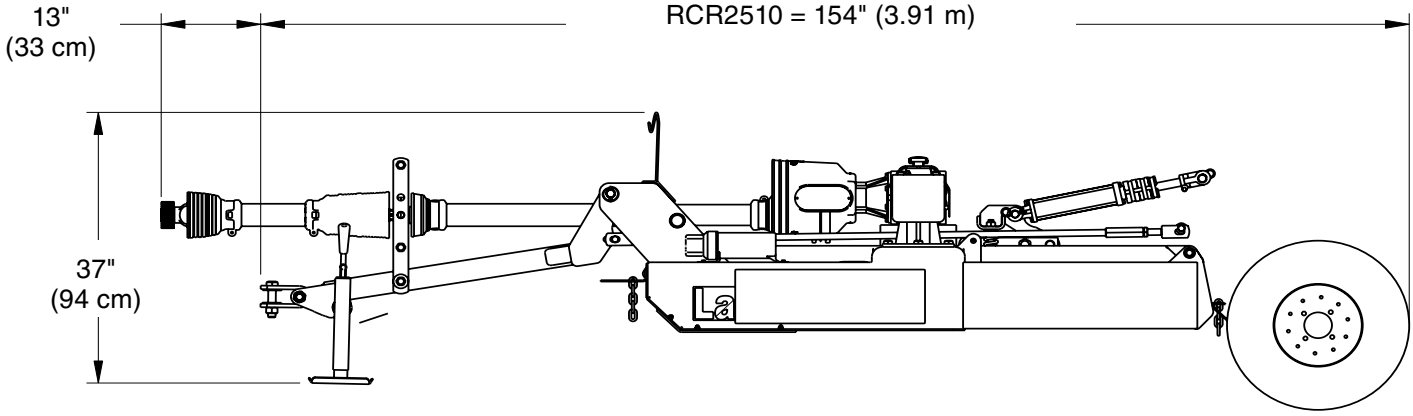

26816

Pull Type Rotary Cutter

RCR2510 Model

Features	Benefits
Surpassed rugged industry standards	All Land Pride cutters have been designed and tested and meet rigorous voluntary testing procedures specified by ANSI.
Tractor horsepower range	3-point 2510 Model = 60-110 hp Pull-type 2510 Model = 50-110 hp
540 rpm	Fits wider variety of tractors.
Gearbox horsepower rating	120 Horsepower on splitter gearbox and 60 hp on outboard gearboxes.
10 Year limited gearbox warranty	Quality and dependability to handle tough mowing applications. Demonstrates Land Pride's confidence in the integrity of our gearboxes.
3 Gearboxes	Allows equal torque to be spread to left and right gearbox.
Splined rubber flex- couplers between the center and outboard gearboxes	Protects the driveline and gearboxes from hard objects in the blade path.
Constant velocity u-Joint option on RCR2510 pull-type	Reduces chatter and extends life of U-joint during turns.
Slip-clutch protection on main driveline	Slip-clutch is more convenient than shear-bolt, protects gearbox against sudden impact.
3-Point or pull-type	Pull-type fits older tractors without a top link or smaller tractors without enough lift capacity. (RCR2510 3-point: Cat. 2 & 3)
High productive cutting width	RCR2510 cuts 9'-10" (3.00 m) width.
Fully welded 10 gauge deck	Fully welded deck adds rigidity.
3/16" Sidewall thickness	Protects sidewalls from thrown objects.
Obstacle free underside	Underside of deck is free of reinforcement members which tend to allow material to lodge.
Round back design	Allows for cleaner and efficient discharge of material, helps eliminate damage to rear corners by not sticking out.
Dual leveling rods on pull-type	Dual leveling rods eliminate deck twisting when going over uneven terrain.
Chain or rubber shield option	Reduces flying debris.
Full length skids with replaceable shoes	Adds reinforcement to side panels. Replaceable shoes allows for change before wearing through to weld-on piece.
Splined blade hub	Splined blade hub offers tight non-slipping attachment to output shaft.
3/16" Round stump jumper	Standard stump jumper aids in sliding over obstructions, which helps protect gearbox output shaft.
1" x 4" (2.5 x 10.2 cm) Blade bar	Heavy-duty blade bar adds support to stump jumper as well as gearbox output shaft.
1/2" x 4" Heat-treated blades	Heat-treated blades last longer than non-heat-treated blades.
1 1/2" Dia. cutting capacity	Aids in cutting brush.
High blade tip speed	RCR2510 at 540 rpm = 17,749 FPM Means cleaner cutting of material.
Laminated tires	Laminated tires can handle almost any condition.
Airplane tires (Pull-type only)	Airplane tires offer smooth road-ability.
Fits Land Pride Quick-Hitch	Allows for quick and easy one person hook-up.

Troubleshooting Chart

Problem	Cause	Solution
Oil seal leaking	Gearbox overfilled	Drain to side plug hole
	Seals damaged	Replace seals
	Grass or wire wrapped on shaft in seal area	check seal areas daily
Driveline yoke or cross failing	Shock load	Avoid hitting solid objects
	Needs lubrication	Lubricate every 8 hours
	Clutch is frozen	Slip-clutch per “Run-In” instructions. Refer to **“Slip-Clutch Run-in Intervals”** on page 39.
Driveline clutch is slipping	Scalping the ground	Raise cutting height
	Cutting too fast	Reduce travel speed
	Power take-off being engaged too fast at high engine rpm	Slowly engage power take-off at low engine rpm
	Cutting over solid objects	Avoid solid objects
	Clutch is not properly adjusted	Adjust slip-clutch spring tension. Identify clutch and then refer to its adjustment instructions. Refer to **“Slip-Clutch Identification”** on page 39.
	Clutch plates are worn out	Replace clutch plates. Identify clutch and then refer to its breakdown instructions. Refer to **“Slip-Clutch Identification”** on page 39.
	Foreign object caught between clutch plates	Remove foreign objects. Identify the clutch and then refer to its breakdown instructions. Refer to **“Slip-Clutch Identification”** on page 39.
Bent Driveline (NOTE: driveline should be repaired or replaced if bent)	Contacting frame	Reduce lift height in transport position
	Contacting drawbar	Reposition drawbar
	Bottoming out	Shorten driveline
Driveline telescoping tube failing	Shock load	Avoid hitting solid objects
Driveline telescoping tube wearing	Needs lubrication	Lubricate every 20 hours
Blades Lock Up	Blades locked together (become overlapped)	Use pry bar or other tool to separate cutting blades before lowering wing.
	Tractor has **“INSTANT ON”** power take-off	Engage power take-off at low rpm and then slowly increase engine speed to full power take-off speed. Refer to **“Blade Engagement”** on page 33.
	Tractor has **“INSTANT OFF”** power take-off	Decrease engine speed slowly to an idle and then disengage power take-off. Refer to **“Blade Disengagement”** on page 33.
Blades wearing excessively	Cutting on sandy ground	Raise cutting height
	Contacting ground frequently	Raise cutting height
Blades breaking	Hitting solid objects	Avoid hitting solid objects
	Blades hitting each other	Blade carriers need to be timed
Blades coming loose	Blades not tightened properly	Tighten blade hardware refer to Cutter Blade Maintenance on page 37.
	Improper deck attitude	Lower front of deck, see page 22

Troubleshooting Chart

Problem	Cause	Solution
Blade carrier becomes loose	Running loose in the past	Replace gearbox output shaft and blade carrier
	Blade carrier hardware not tight enough	Tighten to specified torque
Blade bolt holes worn	Blade hardware running loose	Replace blades and blade bolts if worn
Blade carrier bent	Hitting solid objects	Avoid hitting solid objects and replace blade carrier
Excessive side skid wear	Cutting height not level	Adjust cutter height
	Soil abrasive	Adjust cutter height
	Cutting too low	Adjust cutter height
Tail wheel support failing	Lowering too fast	Adjust rate of drop
	Hitting objects when turning	Reduce speed on turns
Excessive vibration	Driveline bent	Replace driveline
	Blades loose	Tighten blade bolts
	Blade carrier bent	Replace blade carrier
	Blade broken	Replace blade
	Blade will not swing	Remove and inspect blade
	Blades have unequal weight	Replace both blades

Torque Values Chart for Common Bolt Sizes

Bolt Size (inches)	Bolt Head Identification Grade 2		Grade 5		Grade 8	
in-tpi [1]	N · m [2]	ft-lb [3]	N · m	ft-lb	N · m	ft-lb
1/4" - 20	7.4	5.6	11	8	16	12
1/4" - 28	8.5	6	13	10	18	14
5/16" - 18	15	11	24	17	33	25
5/16" - 24	17	13	26	19	37	27
3/8" - 16	27	20	42	31	59	44
3/8" - 24	31	22	47	35	67	49
7/16" - 14	43	32	67	49	95	70
7/16" - 20	49	36	75	55	105	78
1/2" - 13	66	49	105	76	145	105
1/2" - 20	75	55	115	85	165	120
9/16" - 12	95	70	150	110	210	155
9/16" - 18	105	79	165	120	235	170
5/8" - 11	130	97	205	150	285	210
5/8" - 18	150	110	230	170	325	240
3/4" - 10	235	170	360	265	510	375
3/4" - 16	260	190	405	295	570	420
7/8" - 9	225	165	585	430	820	605
7/8" - 14	250	185	640	475	905	670
1" - 8	340	250	875	645	1230	910
1" - 12	370	275	955	705	1350	995
1-1/8" - 7	480	355	1080	795	1750	1290
1-1/8" - 12	540	395	1210	890	1960	1440
1-1/4" - 7	680	500	1520	1120	2460	1820
1-1/4" - 12	750	555	1680	1240	2730	2010
1-3/8" - 6	890	655	1990	1470	3230	2380
1-3/8" - 12	1010	745	2270	1670	3680	2710
1-1/2" - 6	1180	870	2640	1950	4290	3160
1-1/2" - 12	1330	980	2970	2190	4820	3560

Bolt Size (Metric)	Bolt Head Identification 5.8 Class 5.8		8.8 Class 8.8		10.9 Class 10.9	
mm x pitch [4]	N · m	ft-lb	N · m	ft-lb	N · m	ft-lb
M 5 X 0.8	4	3	6	5	9	7
M 6 X 1	7	5	11	8	15	11
M 8 X 1.25	17	12	26	19	36	27
M 8 X 1	18	13	28	21	39	29
M10 X 1.5	33	24	52	38	72	53
M10 X 1.25	35	26	53	39	76	56
M12 X 1.75	58	42	91	67	125	93
M12 X 1.5	60	44	95	70	130	97
M12 X 1	90	66	105	77	145	105
M14 X 2	92	68	145	105	200	150
M14 X 1.5	99	73	155	115	215	160
M16 X 2	145	105	225	165	315	230
M16 X 1.5	155	115	240	180	335	245
M18 X 2.5	195	145	310	230	405	300
M18 X 1.5	220	165	350	260	485	355
M20 X 2.5	280	205	440	325	610	450
M20 X 1.5	310	230	650	480	900	665
M24 X 3	480	355	760	560	1050	780
M24 X 2	525	390	830	610	1150	845
M30 X 3.5	960	705	1510	1120	2100	1550
M30 X 2	1060	785	1680	1240	2320	1710
M36 X 3.5	1730	1270	2650	1950	3660	2700
M36 X 2	1880	1380	2960	2190	4100	3220

[1] in-tpi = nominal thread diameter in inches-threads per inch

[2] N· m = newton-meters

[3] ft-lb= foot pounds

[4] mm x pitch = nominal thread diameter in millimeters x thread pitch

Torque tolerance + 0%, -15% of torque values. Unless otherwise specified use torque values listed above.
All locknuts or lubricated fasteners: Use 75% of torque value. (i.e. 1/2"-13 GR5 = 76 ft-lb; 75% of 76 or .75 x 76 = 57 ft-lb)

Additional Torque Values

Flex Coupler Nuts	35 to 40 ft-lbs (47 to 54 Nm) Beaded washer should be embedded halfway into rubber disc.
Blade Bolt Locknut	450 ft-lbs (610 Nm)
Blade Carrier Hub Nut	450 ft-lbs (610 Nm) minimum
Wheel Lug Nuts	85 ft-lbs (115 Nm)

Tire Inflation Chart

Tire Size	Inflation PSI
24" x 7.7" AC Tire	**40 (276 kPa)**

Warranty

Land Pride warrants to the original purchaser that this Land Pride product will be free from defects in material and workmanship beginning on the date of purchase by the end user according to the following schedule when used as intended and under normal service and conditions for personal use.

Overall Unit and Drivelines: One year Parts and Labor

Gearbox: S/N 2332500+ or retailed and warranty registered after 2/1/25
10 Years Limited: 6 years Full Warranty, Parts and Labor
Years 7, 8, 9, and 10 covers Parts Only including seals

Hydraulic Cylinder: One year Parts and Labor

Blades, Tires, and Driveline Friction Discs: Considered wear items

This Warranty is limited to the repair or replacement of any defective part by Land Pride and the installation by the dealer of any such replacement part, and does not cover common wear items such as blades, belts, tines, etc. Land Pride reserves the right to inspect any equipment or parts which are claimed to have been defective in material or workmanship.

This Warranty does not apply to any part or product which in Land Pride's judgment shall have been misused or damaged by accident or lack of normal maintenance or care, or which has been repaired or altered in a way which adversely affects its performance or reliability, or which has been used for a purpose for which the product is not designed. Misuse also specifically includes failure to properly maintain oil levels, grease points, and driveline shafts.

Claims under this Warranty should be made to the dealer which originally sold the product and all warranty adjustments must be made through an authorized Land Pride dealer. Land Pride reserves the right to make changes in materials or design of the product at any time without notice.

This Warranty shall not be interpreted to render Land Pride liable for damages of any kind, direct, consequential, or contingent to property. Furthermore, Land Pride shall not be liable for damages resulting from any cause beyond its reasonable control. This Warranty does not extend to loss of crops, any expense or loss for labor, supplies, rental machinery or for any other reason.

No other warranty of any kind whatsoever, express or implied, is made with respect to this sale; and all implied warranties of merchantability and fitness for a particular purpose which exceed the obligations set forth in this written warranty are hereby disclaimed and excluded from this sale.

This Warranty is not valid unless registered with Land Pride within 30 days from the date of original purchase. Registration is done by your dealer.

IMPORTANT: The Online Warranty Registration should be completed by the dealer at the time of purchase. This information is necessary to provide you with quality customer service.

Model Number _____ **Serial Number** _____



Corporate Office: P.O. Box 5060
Salina, Kansas 67402-5060 USA
www.landpride.com