Table of Contents

Snow Pusher

SSP1572, SSP1584, & SSP1596
SSP2596, SSP2510, & SSP2512

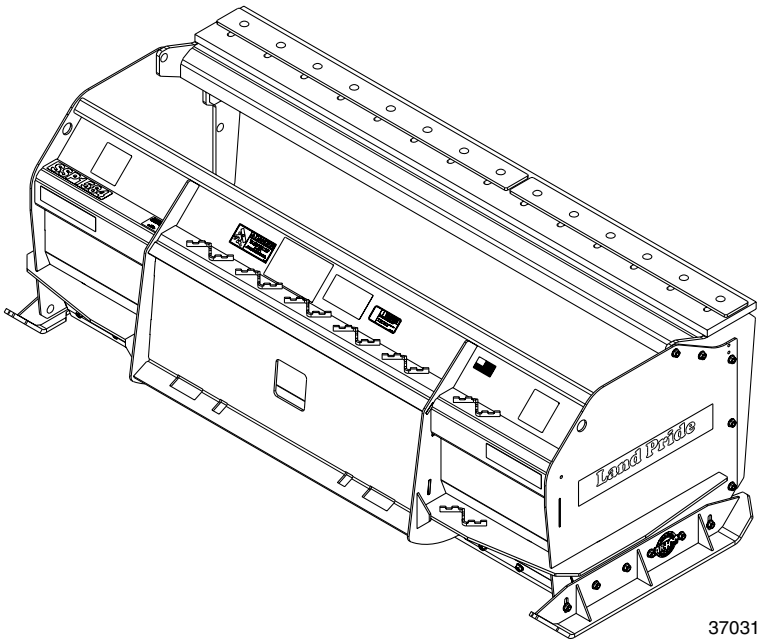

37031

SSP1584 Shown with Pull Back Option

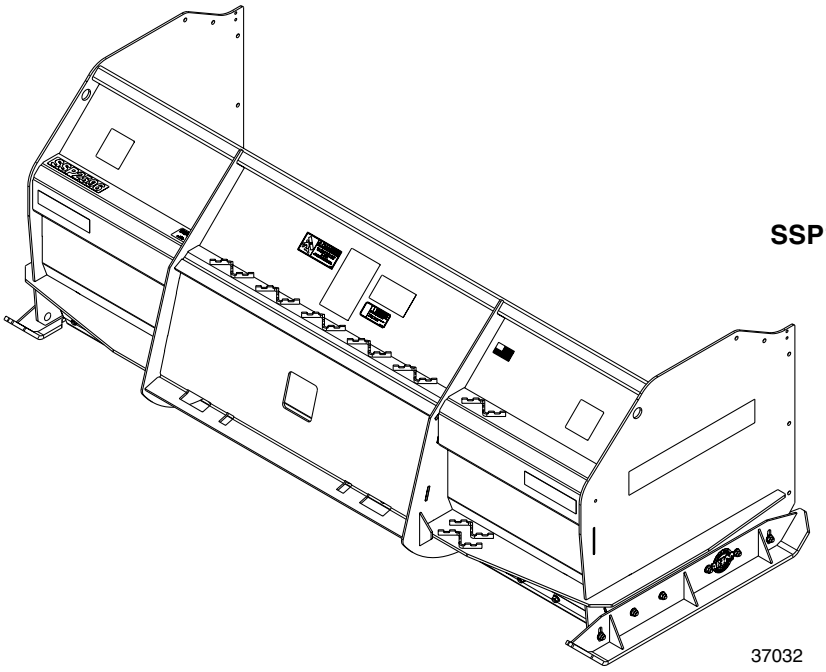

37032

SSP2596

303-348M
Operator's Manual

Land Pride

Read the Operator's Manual entirely. When you see this symbol, the subsequent instructions and warnings are serious - follow without exception. Your life and the lives of others depend on it!

Cover photo may show optional equipment not supplied with standard unit.

© Copyright 2017 *Printed* **1/11/17**

Important Safety Information 1
Safety at All Times 1
Look For The Safety Alert Symbol 1
Safety Labels 4
Introduction 7
Application 7
Using This Manual 7
Terminology 7
Definitions 7
Owner Assistance 7
Serial Number 7
Further Assistance 7
Section 1: Options & Accessories 8
Skid Steer/Tractor Requirements 8
Torque Requirements 8
Dealer Preparations 8
Pull Back (Optional) 8
Pull Back Installation 8
Steel Blade (Optional) 9
Rubber Snow Blade (Optional) 9
Orange Marker Package (Accessory) 10
Section 2: Operating Procedures 11
Operator's Responsibilities 11
Safety Information 11
Machine Shutdown Procedures 12
Hooking-Up The Snow Pusher 12
Unhooking The Snow Pusher 13
Transporting 13
General Operating Instructions 13
Section 3: Adjustments 14
Skid Shoe Adjustment 14
Blade Adjustments 15
Preparation to Adjust Blades 15
New Rubber Snow Blade Adjustment 15
Worn Rubber Snow Blade Adjustment 15
Reverse Rubber Snow Blade 15
Reverse Steel Blades 16
Adjust Pull Back Rubber Blade 16
Reverse Pull Back Rubber Blade 16
Section 4: Maintenance 17
Maintenance 17
Skid Shoes 17
Blades 17
Storage 17
Section 5: Specifications & Capacities 18
Section 6: Features & Benefits 19
Section 7: Torque Values Chart 20
Section 8: Warranty 21



© Copyright 2017 All rights Reserved

Land Pride provides this publication "as is" without warranty of any kind, either expressed or implied. While every precaution has been taken in the preparation of this manual, Land Pride assumes no responsibility for errors or omissions. Neither is any liability assumed for damages resulting from the use of the information contained herein. Land Pride reserves the right to revise and improve its products as it sees fit. This publication describes the state of this product at the time of its publication, and may not reflect the product in the future.

Land Pride is a registered trademark.

All other brands and product names are trademarks or registered trademarks of their respective holders.

Printed in the United States of America.

These are common practices that may or may not be applicable to the products described in this manual.

Safety at All Times

Thoroughly read and understand the instructions given in this manual before operation. Refer to the "Safety Label" section, read all instructions noted on them.

Do not allow anyone to operate this equipment who has not fully read and comprehended this manual and who has not been properly trained in the safe operation of the equipment.

- ▲ The operator must not use drugs or alcohol as they can change the alertness or coordination of that person while operating equipment. The operator should, if taking over-the-counter drugs, seek medical advice on whether he/she can safely operate the equipment.
- ▲ Operator should be familiar with all functions of the unit.
- ▲ Make sure all guards and shields are in place and secured before operating implement.
- ▲ Start skid steer with steering levers and hydraulic controls in neutral.
- ▲ Keep all persons away from equipment and work area.
- ▲ Operate implement and loader arms from the driver's seat only.
- ▲ Dismounting from a moving unit can cause serious injury or death.
- ▲ Do not allow anyone to stand between tractor/skid steer and implement while hooking-up to implement.
- ▲ Keep hands, feet, and clothing away from power-driven parts.
- ▲ Watch out for objects overhead and along side such as fences, buildings, wires, trees, limbs, etc., while transporting and operating attached implement.
- ▲ Detach and store implement in an area where children normally do not play. Secure implement by using blocks and supports.

Look For The Safety Alert Symbol



The SAFETY ALERT SYMBOL indicates there is a potential hazard to personal safety involved and extra safety precaution must be taken. When you see this symbol, be alert and carefully read the message that follows it. In addition to design and configuration of equipment, hazard control, and accident prevention are dependent upon the awareness, concern, prudence, and proper training of personnel involved in the operation, transport, maintenance, and storage of equipment.

Be Aware of Signal Words

A Signal word designates a degree or level of hazard seriousness. The signal words are:

▲ DANGER
Indicates an imminently hazardous situation which, if not avoided, will result in death or serious injury. This signal word is limited to the most extreme situations, typically for machine components that, for functional purposes, cannot be guarded.

▲ WARNING
Indicates a potentially hazardous situation which, if not avoided, could result in death or serious injury, and includes hazards that are exposed when guards are removed. It may also be used to alert against unsafe practices.

▲ CAUTION
Indicates a potentially hazardous situation which, if not avoided, may result in minor or moderate injury. It may also be used to alert against unsafe practices.

For Your Protection

- ▲ Thoroughly read and understand the "Safety Label" section, read all instructions noted on them.

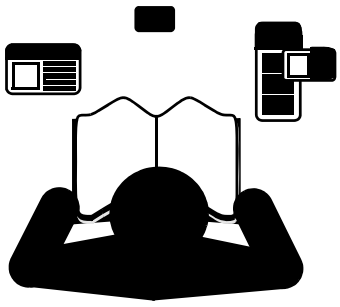

Parts Manual QR Locator

The QR (Quick Reference) code on the cover and to the left will take you to the Parts Manual for this equipment. Download the appropriate App on your smart phone, open the App, point your phone on the QR code and take a picture.

Dealer QR Locator

The QR code on the left will link you to available dealers for Land Pride products. Refer to Parts Manual QR Locator on this page for detailed instructions.

These are common practices that may or may not be applicable to the products described in this manual.

Skid Steer Shutdown & Storage

Before leaving operator's seat:

- ▲ Lower attached implement onto support blocks at the rear and onto skid shoes at the front.
- ▲ Turn off engine and engage parking brake.
- ▲ If included, raise seat bar and move controls until both lock.
- ▲ Remove key to prevent unauthorized starting.
- ▲ Use steps, grab-handles and skid-resistant surfaces when getting on and off the loader.
- ▲ Detach and store implement in an area where children normally do not play. Secure implement using blocks and supports.

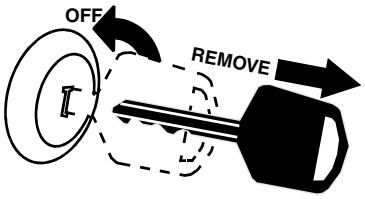

Transport Safely

- ▲ Comply with state and local laws.
- ▲ Use towing vehicle and trailer of adequate size and capacity. Secure equipment towed on a trailer with tie downs and chains.
- ▲ Sudden braking can cause a towed trailer to swerve and upset. Reduce speed if towed trailer is not equipped with brakes.
- ▲ Avoid contact with any over head utility lines or electrically charged conductors.
- ▲ Always drive with load on end of loader arms low to the ground.
- ▲ Always drive straight up and down ramps with load on "uphill" side of tractor or skid steer.
- ▲ Engage parking brake when stopped on an incline.
- ▲ Maximum transport speed for an attached implement is 20 mph. DO NOT EXCEED. Never travel at a speed which does not allow adequate control of steering and stopping. Some rough terrains require a slower speed.
- ▲ As a guideline, use the following maximum speed weight ratios for an attached implement:

  20 mph when weight of attached implement is less than or equal to the weight of machine towing the implement.

  10 mph when weight of attached implement exceeds weight of machine towing implement but not more than double the weight.
- ▲ **IMPORTANT:** Do not tow a load that is more than double the weight of the vehicle towing the load.

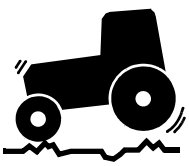

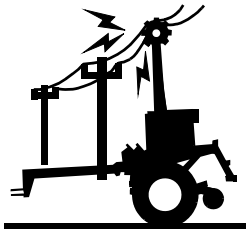





Tractor Shutdown & Storage

Before leaving operator's seat:

- ▲ Lower attached implement onto support blocks at the rear and onto skid shoes at the front.
- ▲ Put tractor in park or set park brake, turn off engine, and remove switch key to prevent unauthorized starting.
- ▲ Detach and store implement in an area where children normally do not play. Secure implement using blocks and supports.

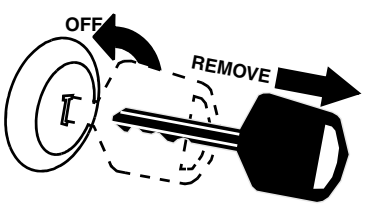

Practice Safe Maintenance

- ▲ Understand procedure before doing work. Use proper tools and equipment, refer to Operator's Manual for additional information.
- ▲ Work in a clean dry area.
- ▲ Lower attached implement to the ground and follow all shutdown procedures before leaving the operator's seat to perform maintenance.
- ▲ Allow implement to cool completely before working on it.
- ▲ Disconnect battery ground cable (-) before servicing or adjusting electrical systems or before welding on implement.
- ▲ Do not grease or oil implement while it is in operation.
- ▲ Inspect all parts. Make sure parts are in good condition & installed properly.
- ▲ Remove buildup of grease, oil, or debris.
- ▲ Remove all tools and unused parts from implement before operation.

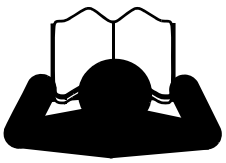







These are common practices that may or may not be applicable to the products described in this manual.

Prepare for Emergencies

- ▲ Be prepared if a fire starts.
- ▲ Keep a first aid kit and fire extinguisher handy.
- ▲ Keep emergency numbers for doctor, ambulance, hospital, and fire department near phone.

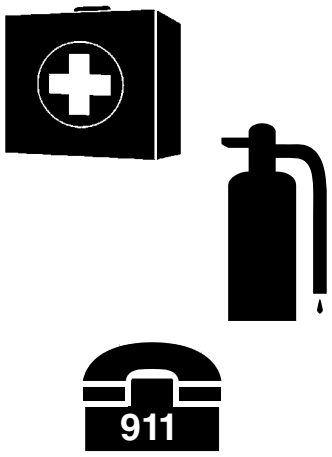

Wear Protective Equipment

- ▲ Wear protective clothing and equipment appropriate for the job. Clothing should be snug fitting without fringes and pull strings to avoid entanglement with moving parts.
- ▲ Prolonged exposure to loud noise can cause hearing impairment or hearing loss. Wear suitable hearing protection such as earmuffs or earplugs.
- ▲ Operating equipment safely requires the operator's full attention. Avoid wearing radio headphones while operating machinery.

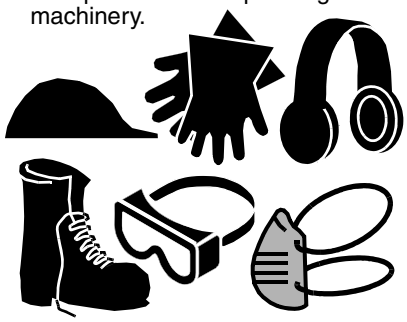

Avoid High Pressure Fluid Hazards

- ▲ Escaping fluid under pressure can penetrate the skin causing serious injury.
- ▲ Avoid the hazard by relieving pressure before disconnecting hydraulic lines or performing work on the system.
- ▲ Make sure all hydraulic fluid connections are tight and all hydraulic hoses and lines are in good condition before applying pressure to the system.
- ▲ Use a piece of paper or cardboard, NOT BODY PARTS, to check for suspected leaks.
- ▲ Wear protective gloves and safety glasses or goggles when working with hydraulic systems.
- ▲ **DO NOT DELAY.** If an accident occurs, see a doctor familiar with this type of injury immediately. Any fluid injected into the skin or eyes must be treated within a few hours or gangrene may result.



Use Safety Lights & Devices

- ▲ Slow moving tractors, skid steer, self-propelled equipment, and towed implements can create a hazard when driven on public roads. They are difficult to see, especially at night.
- ▲ Flashing warning lights and turn signals are recommended whenever driving on public roads.

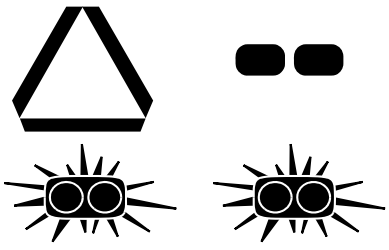

Use Seat Belt and ROPS

- ▲ Operate only skid steers and tractors equipped with a Roll-Over Protective Structure (ROPS) and seat belt.
- ▲ Fasten seat belt snugly and securely to help protect against serious injury or death from machine overturning and falling from machine.
- ▲ Wearing protective equipment such as safety shoes, safety glasses, hard hat, and ear plugs is highly recommended.

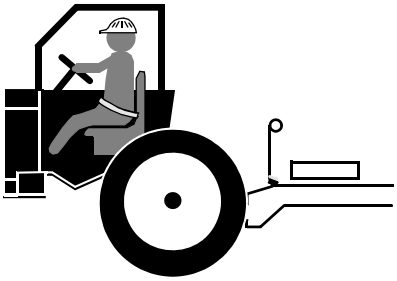

Keep Riders Off Machinery

- ▲ Never carry riders or use machinery as a personlift.
- ▲ Riders obstruct operator's view.
- ▲ Riders could be struck by foreign objects or thrown from the machine.
- ▲ Never allow children to operate equipment.

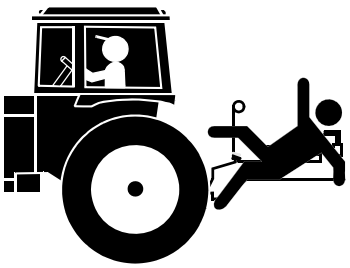

Safety Labels

Your Snow Pusher comes equipped with all safety labels in place. They were designed to help you safely operate your implement. Read and follow their directions.

1. *Keep all safety labels clean and legible.*
2. *Refer to this section for proper label placement. Replace all damaged or missing labels. Order new labels from your nearest Land Pride dealer. To find your nearest dealer, visit our dealer locator at www.landpride.com.*
3. *Some new equipment installed during repair requires safety labels to be affixed to the replaced component as specified by Land Pride. When ordering new components make sure the correct safety labels are included in the request.*
4. *Refer to this section for proper label placement.*
   To install new labels:
   a. *Clean the area the label is to be placed.*
   b. *Spray soapy water on the surface where the label is to be placed.*
   c. *Peel backing from label. Press firmly onto the surface.*
   d. *Squeeze out air bubbles with the edge of a credit card or with a similar type straight edge.*

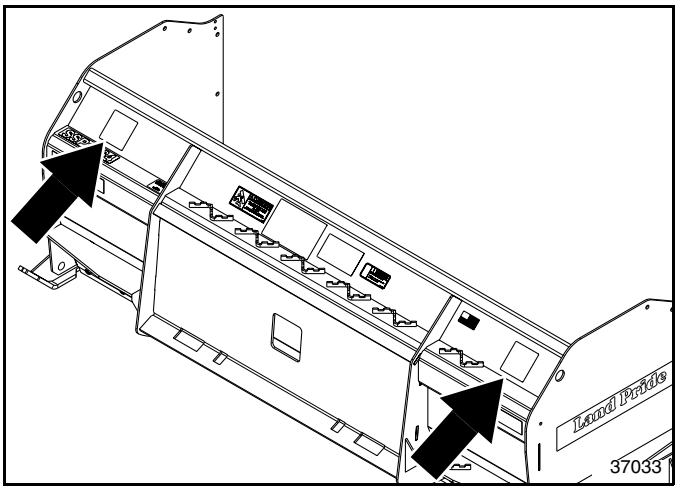



838-112C

Danger: Pinching Hazard (2 places)

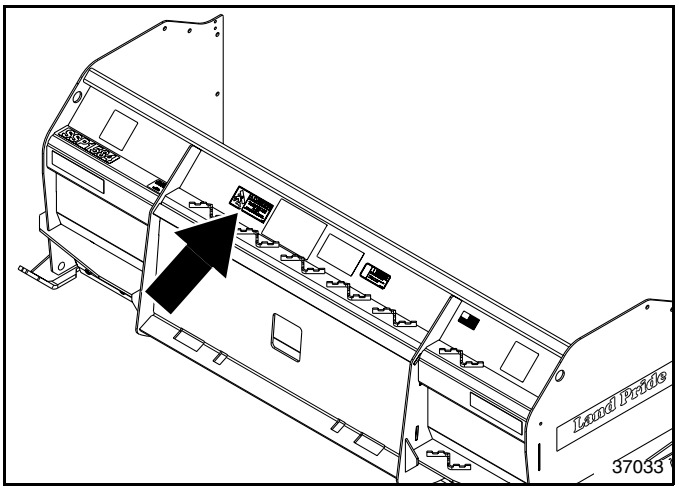

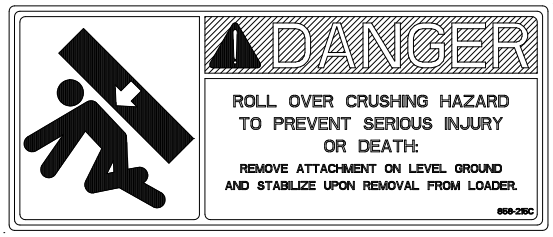

858-215C

Danger: Roll Over Crushing Hazard

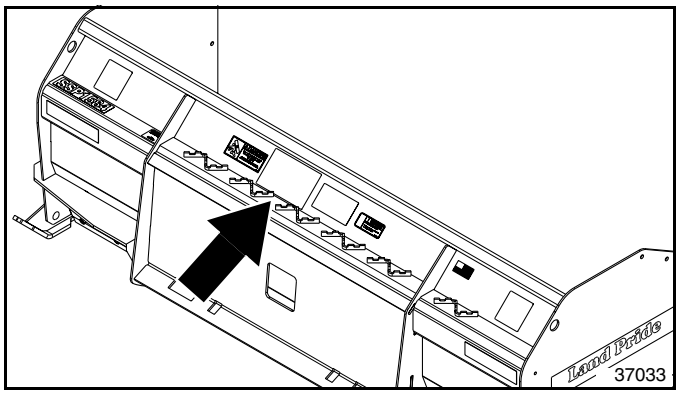

SSP15 Series

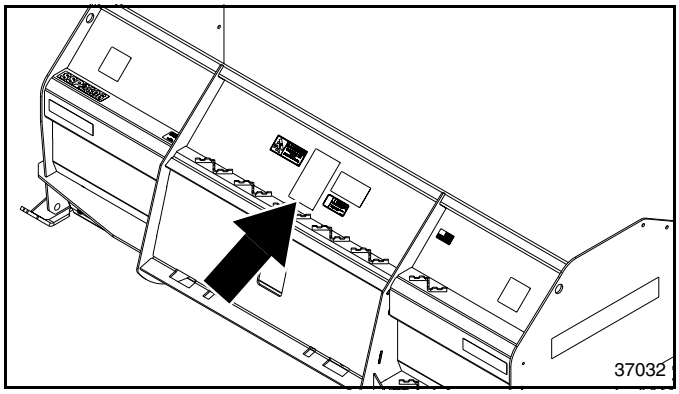

SSP25 Series

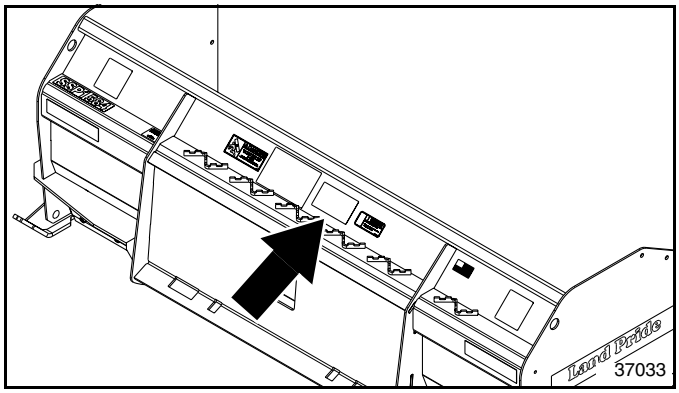

SSP15 Series

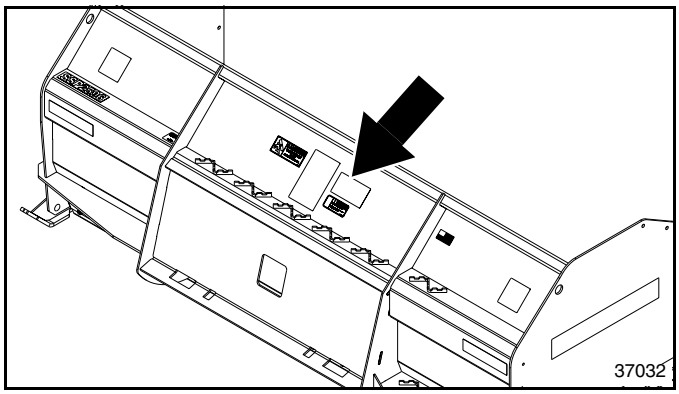

SSP25 Series

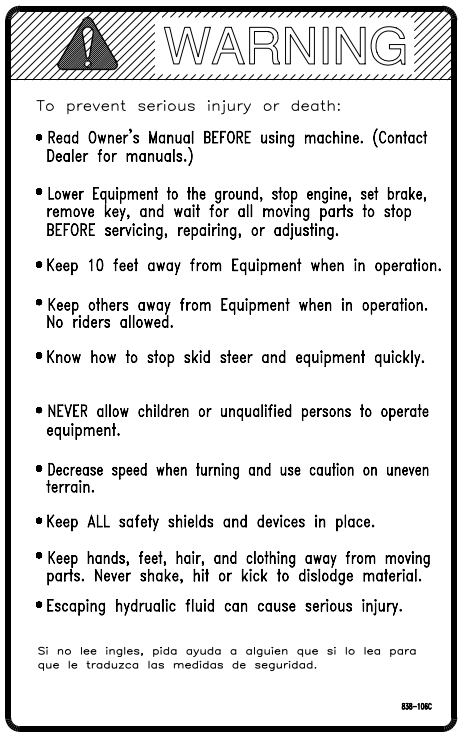

838-106C

Warning: General Warning

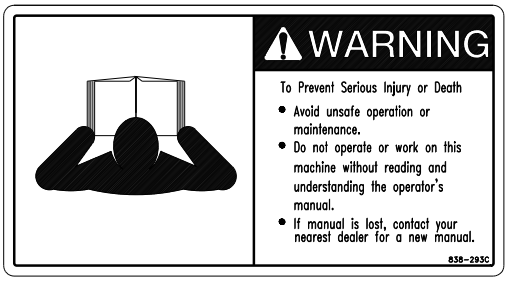

838-293C

Warning: Read & Understand Manual

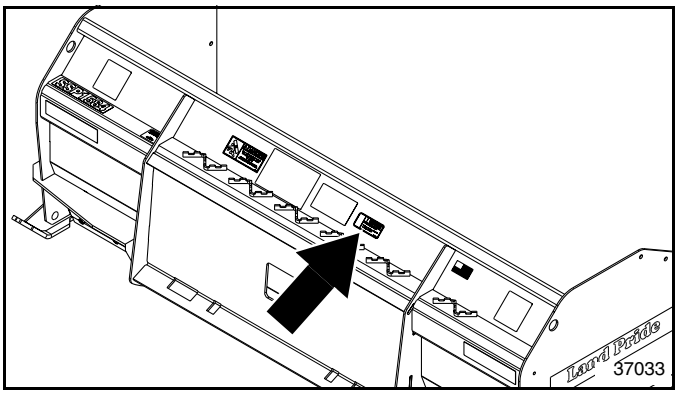

SSP15 Series

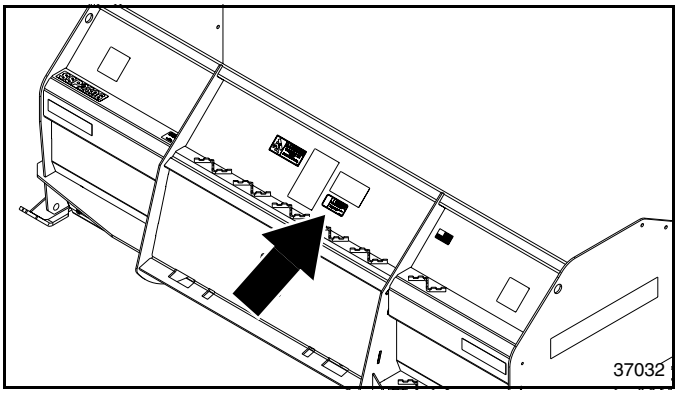

SSP25 Series

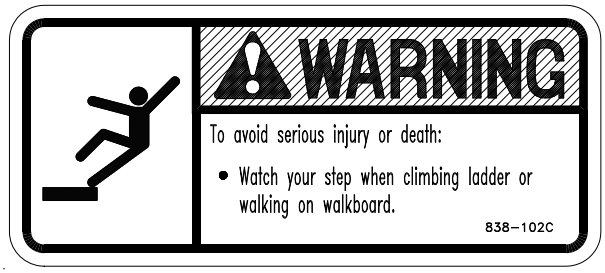

838-102C

Warning: Watch Your Step (Falling Hazard)

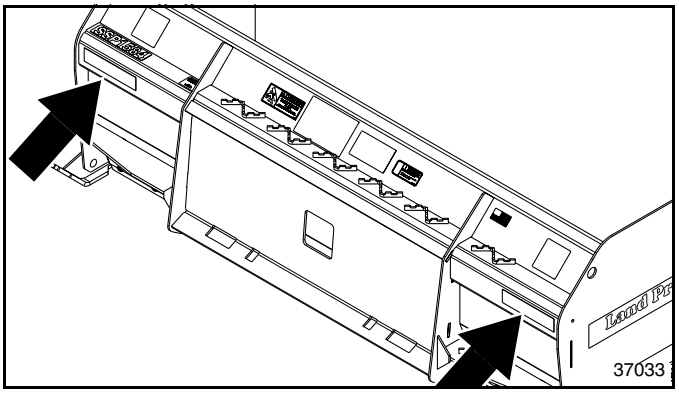



838-614C

2" x 9" Red Reflector (2 places)

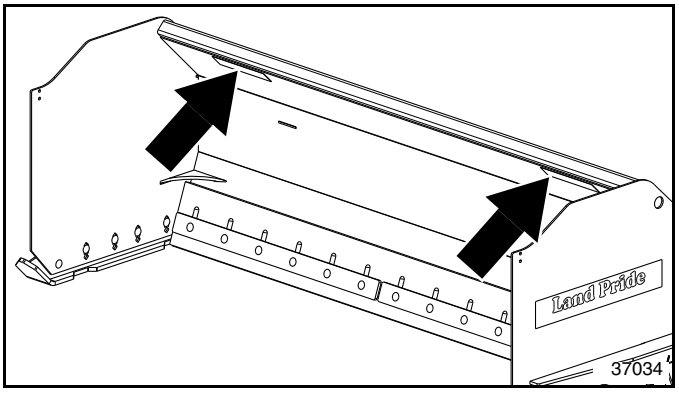



838-615C

2" x 9" Amber Reflector (2 places)

Land Pride welcomes you to the growing family of new product owners.

This Snow Pusher has been designed with care and built by skilled workers using quality materials. Proper assembly, maintenance, and safe operating practices will help you get years of satisfactory use from this machine.

Application

Land Pride's SSP15 and 25 Series Snow Pushers are available in popular sizes to fit your skid steer or tractor loader equipped with a universal Quick-Attach hitch. They are designed to push snow and other loose materials straight ahead without leaving windrows on the side or damaging the pavement below when using the optional rubber snow blade.

The 15 Series is manufactured in 72", 84", and 96" model widths with 10 ga. moldboard and 1/4" x 30" tall side panels. The 25 Series is offered in 96", 10', and 12' model widths with 3/16" moldboard and 5/16" x 35" tall side panels.

All models come equipped with AR400 skid shoes that are adjustable, reversible, and replaceable. The customer can choose between the optional 8" rubber snow blade or optional 1/2" x 6" steel blades. The rubber snow blade is designed to help eliminate pavement damage and damage to lot striping on most surfaces.

The customer may also choose to add the optional pull back feature for removing snow close to garage doors. Orange markers are available as an accessory to assist in locating the outer ends of the Snow Pusher.

See **"Specifications & Capacities"** on page 18 and **"Features & Benefits"** on page 19 for additional information and performance enhancing options.

Using This Manual

- This Operator's Manual is designed to help familiarize you with safety, assembly, operation, adjustments, troubleshooting, and maintenance. Read this manual and follow the recommendations to help ensure safe and efficient operation.
- The information contained within this manual was current at the time of printing. Some parts may change slightly to assure you of the best performance.
- To order a new Operator's or Parts Manual, contact your authorized dealer. Manuals can also be downloaded, free-of-charge, from our website at www.landpride.com

Terminology

"Right" or "Left" as used in this manual is determined by facing the direction the machine will operate while in use unless otherwise stated.

Definitions

IMPORTANT: A special point of information related to the following topic. Land Pride's intention is this information must be read & noted before continuing.

NOTE: A special point of information that the operator should be aware of before continuing.

Owner Assistance

The Online Warranty Registration should be completed by the dealer at the time of purchase. This information is necessary to provide you with quality customer service.

The parts on your Snow Pusher have been specially designed by Land Pride and should only be replaced with genuine Land Pride parts. Contact a Land Pride dealer if customer service or repair parts are required. Your Land Pride dealer has trained personnel, repair parts, and equipment needed to service the implement.

Serial Number

Model No. _____Serial No. _____

For quick reference and prompt service, record model and serial number in the spaces provided above and again on warranty page 21. Always provide model number and serial number when ordering parts and in all correspondences with your Land Pride dealer. Refer to Figure 1 for location of your serial number plate.

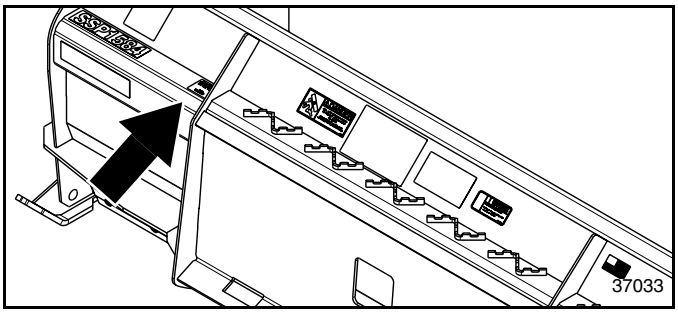

Serial Number Plate Location
Figure 1

Further Assistance

Your dealer wants you to be satisfied with your new Snow Pusher. If for any reason you do not understand any part of this manual or are not satisfied with the service received, the following actions are suggested:

1. Discuss the matter with your dealership service manager making sure that person is aware of any problems you may have and has had the opportunity to assist you.
2. If you are still not satisfied, seek out the owner or general manager of the dealership, explain the problem, and request assistance.
3. For further assistance write to:

Land Pride Service Department
1525 East North Street
P.O. Box 5060
Salina, Ks. 67402-5060

E-mail address
lpservicedept@landpride.com

Skid Steer/Tractor Requirements

The Snow Pusher is designed to attach to skid steer loaders and tractor loaders equipped with a universal quick attach hitch with the following requirements:

Hitch type . . . . . Universal Quick Attach
Horsepower range:
SSP15 Series . . . . . 30-60 HP
SSP25 Series . . . . . 50-80 HP
Maximum tractor/skid steer weight:
SSP15 Series . . . . . 5,000 lbs.
SSP25 Series . . . . . 8,000 lbs.
Maximum tractor/skid steer lift capacity:
SSP15 Series . . . . . 2,000 lbs.
SSP25 Series . . . . . 5,000 lbs.

WARNING

To prevent serious injury or death:

Ballast weights may be required to maintain steering control and prevent tipping. Refer to your power machine Operator's Manual to determine proper ballast and maximum weight limitations. Do not exceed maximum lift capacity above.

IMPORTANT: Tractors/skid steers outside the horsepower range listed above must not be used. Higher horsepower can damage the Snow Pusher. Under horsepower will make the job difficult.

Torque Requirements

Refer to **"Torque Values Chart"** on page 20 to for correct torque values when tightening hardware.

Dealer Preparations

Ensure that the intended tractor/skid steer conforms to the requirements stated under the heading **"Skid Steer/ Tractor Requirements"** on this page.

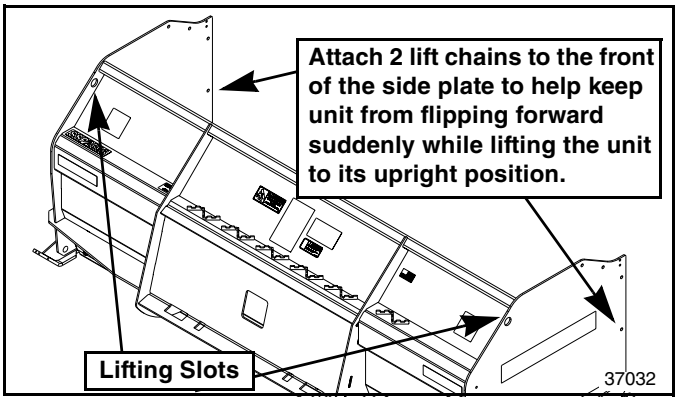

Figure 1-1

Refer to Figure 1-1:

CAUTION

To prevent serious injury:

Keep clear. Snow Pusher can flip forward suddenly causing serious bodily injury while lifting unit from the crate.

1. The Snow Pusher is shipped on its back. Cut and remove shipping crate corner posts and top frame.
2. Using a hoist, fork lift, or other lifting device, attach lifting chains to the two lifting slots at the back and to the front of the two side plates.
3. Slowly lift unit until it has rotated upright.
4. Lower unit down slowly until resting on its skid shoes.

Accessories are easier to attach after hooking-up Snow Pusher to a tractor or skid steer. Refer to **"Hooking-Up The Snow Pusher"** on page 12 for detailed instructions.

Pull Back (Optional)

Refer to Figure 1-2:

Land Pride offers an optional pull back blade complete with mounting hardware for attaching to all models of the Snow Pusher except model SSP2512. This kit will allow operator to pull snow away from garage doors while backing up. See cover for mounting location of pull back.

NOTE: Rubber snow blade (#7) and retaining bars (#1 & #2) are shipped from the factory bolted to pull back frame (#3) with bolts (#5) and nuts (#6).

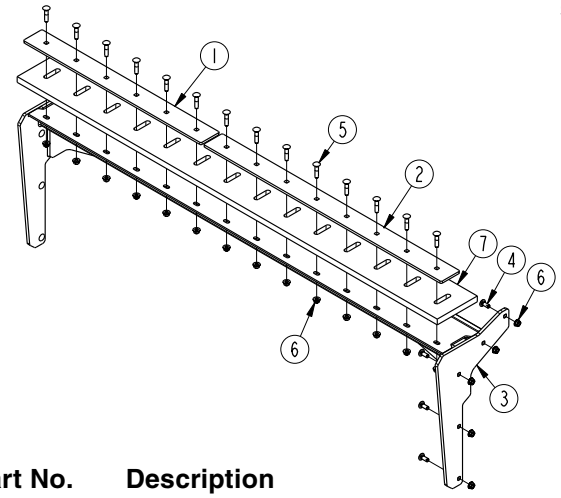

Part No.	Description
303-380A	SSP1572 PULL BACK
303-379A	SSP1584 PULL BACK
303-378A	SSP1596 PULL BACK
303-386A	SSP2596 PULL BACK
303-385A	SSP2510 PULL BACK

Pull Back Option
Figure 1-2

Pull Back Installation

Refer to Figure 1-2:

CAUTION

To prevent serious injury:

Support pull back securely with a hoist or other lifting device until several bolts on each side has been inserted and secured with hex whiz nuts to keep unit from falling suddenly.

1. With pull back supported with a hoist or other lifting device, attach short arms of pull back frame (#3) between Snow Pusher side panels as shown on the cover with one 1/2"-13 x 1 1/4" GR5 carriage bolt (#4) and hex whiz nut (#6) on each side panel.

CAUTION

To prevent serious injury:

Be careful not to pinch fingers, hands, or other body extremities between pull back and Snow Pusher as unit is rotated into final mounting position.

IMPORTANT: The long legs of the pull back may need pulled together to rotate pull back in between the Snow Pusher side panels.

2. Lower lifting device enough to roll pullback into position and install another carriage bolt (#4) and hex whiz nut (#6) in each side panel.
3. If desired, lifting device can now be removed.
4. Continue to attach pull back to the side panels with carriage bolts (#4) and hex whiz nuts (#6). When finished, tighten nuts (#6) to the correct torque.

Steel Blade (Optional)

Refer to Figure 1-3:

Land Pride offers optional steel blade kits complete with mounting hardware.

IMPORTANT: The steel blades are not designed to move soil, rock, and other compacted surfaces. They can cause structural damage to the terrain and Snow Pusher if not used with care.

Rubber Snow Blade (Optional)

Refer to Figure 1-4:

Land Pride offers optional rubber snow blade kits complete with mounting hardware.

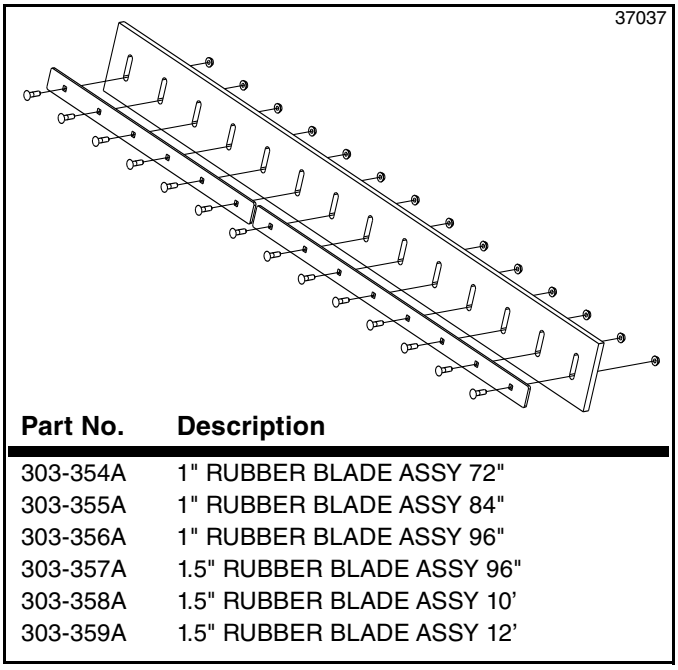

Part No.	Description
303-354A	1" RUBBER BLADE ASSY 72"
303-355A	1" RUBBER BLADE ASSY 84"
303-356A	1" RUBBER BLADE ASSY 96"
303-357A	1.5" RUBBER BLADE ASSY 96"
303-358A	1.5" RUBBER BLADE ASSY 10'
303-359A	1.5" RUBBER BLADE ASSY 12'

Snow Blade Option
Figure 1-4

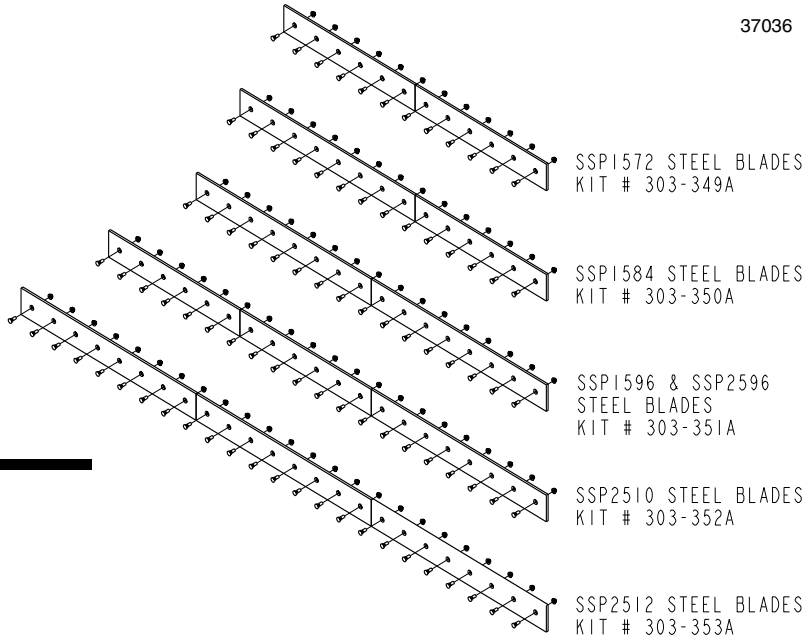

Item	Part No.	Description
303-349A		SSP STEEL BLADE ASSEMBLY 72"
303-350A		SSP STEEL BLADE ASSEMBLY 84"
303-351A		SSP STEEL BLADE ASSEMBLY 96"
303-352A		SSP STEEL BLADE ASSEMBLY 10'
303-353A		SSP STEEL BLADE ASSEMBLY 12'

Steel Blade Option
Figure 1-3

Orange Marker Package (Accessory)

Part No. 323-026A

Refer to Figure 1-5:

Land Pride offers 28" orange markers that can be bolted to the side panels. These assist in locating the outer ends of the Snow Pusher when approaching buildings, trees, poles, and other obstacles that could damage the unit, tractor/skid steer, and obstructions.

NOTE: Orange Marker Package cannot be used with Pull Back Option.

1. Attach 28" orange marker (#3) to the right side of the Snow Pusher side panel with two 5/16"-18 x 1" GR5 hex head cap screws (#1) and hex nylock nuts (#2). Tighten nylock nuts to the correct torque.
2. Repeat step 1 for the left side.

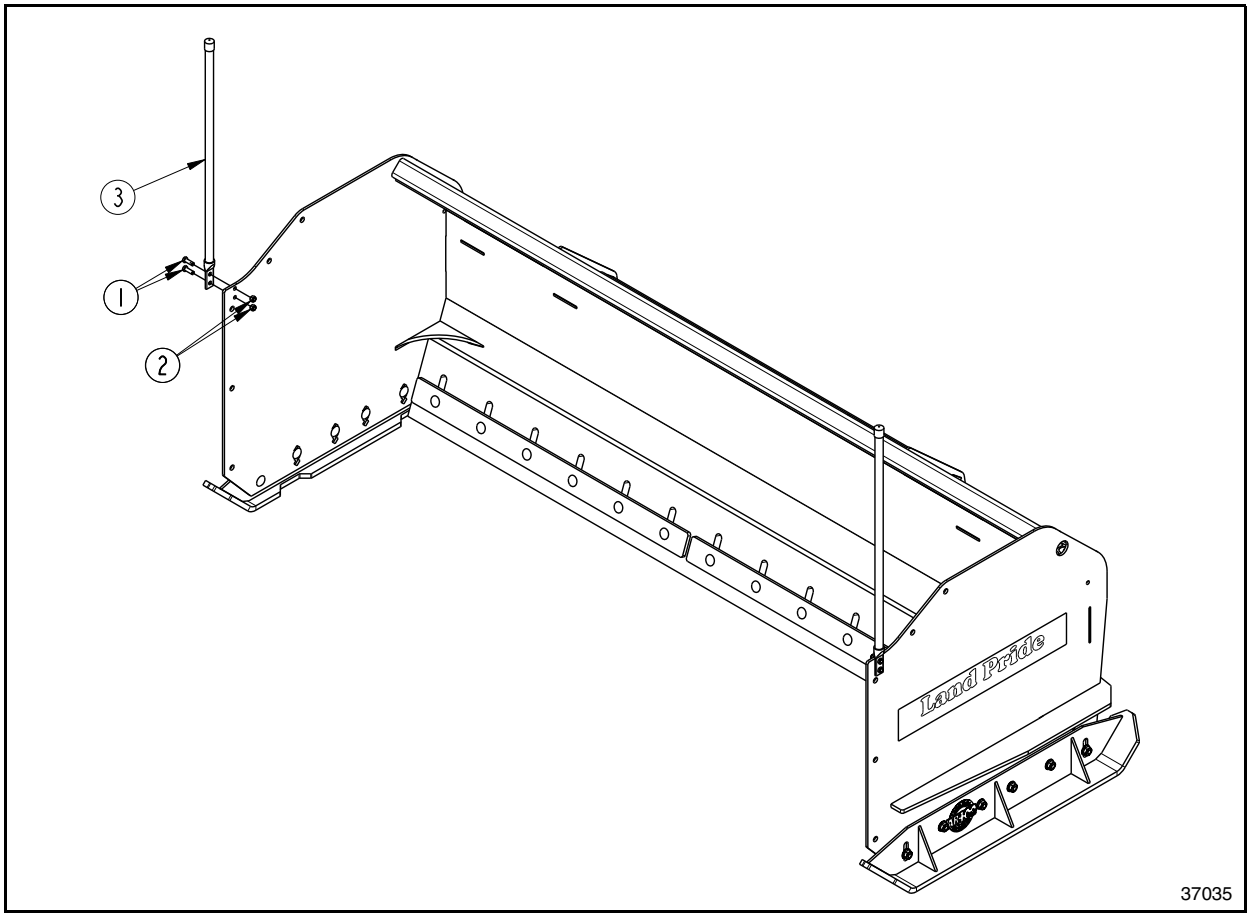

Orange Marker Assembly
Figure 1-5

Operator's Responsibilities

Hazard control and accident prevention are dependent upon the awareness, concern, prudence, and proper training involved in the operation, transport, storage, and maintenance of the Snow Pusher. Therefore, it is absolutely essential that no one operates the Snow Pusher without first having read, fully understood, and become totally familiar with the Operator's Manual. Make sure the operator has completed the Operating Checklist below.

Operating Checklist

✔	Check	Page
	Read and follow all safety rules carefully. Refer to "Important Safety Information".	1
	Read and follow hook-up instructions. Make sure locking pins are fully extended into the bottom slots and locking handles are locked down. Refer to "Hooking-Up The Snow Pusher".	12
	Read and follow all safety & operating instructions. Refer to "Section 2: Operating Procedures".	11
	Read and make all required adjustments. Be sure all bolts have been installed and are secured. Refer to "Section 3: Adjustments".	14
	Read and follow all Maintenance Instructions. Refer to "Section 4: Maintenance".	17
	Check Snow Pusher initially and periodically for loose bolts. Refer to "Torque Values Chart"	20

Safety Information

DANGER

To prevent serious injury or death:

Do not get pinned by the loader lift arms. Getting pinned by the arms is one of the leading cause of fatal accidents.

- *Always operate attachment while seated with seat belt fastened around operator.*
- *Keep your head, arms, and legs inside the cab while operating the power machine and attachment.*
- *Never operate equipment from outside the cab.*
- *Before leaving the operator's seat, lower attachment to the ground and do a proper shut down of the power machine.*
- *Use the skid steer's alternate emergency exit when exit passage through the front is blocked.*
- *Do not use hand or foot controls for handholds or steps.*
- *Keep mud, snow, ice, and debris out of foot controls.*
- *If included, raise restraint bar and move controls until both are locked and interlock system is activated.*
- *Inspect interlock control system regularly and perform required maintenance to keep it operating properly.*
- *Never bypass or modify a safety device.*

DANGER

To prevent serious injury or death:

- *Operate tractor or skid steer only if equipped with a Roll-Over Protective Structure (ROPS) and seat belt. Fasten seat belt snugly and securely to protect against falling or being thrown and crushed causing serious injury or death.*
- *Keep away from electrical power lines. Place an orange warning sign under overhead power lines indicating type of danger above. Electrocution is often fatal.*

WARNING

To prevent serious injury or death:

- *Never allow riders on the tractor/skid steer or Snow Pusher. They can fall and sustain serious injuries or death.*
- *It is the operator's responsibility to not allow anyone near the Snow Pusher during its operation.*
- *Use stepping pads, grab-handles, and skid-resistant surfaces when getting on or off the skid steer. Using unapproved surfaces and handles to mount and dismount can result in a falling hazard and cause serious injury or death.*
- *Do not allow anyone to operate this Snow Pusher who is under the age of 16 or who has not been properly trained to operate this machine safely. Allowing underage or under trained personnel to operate this unit could damage the unit, cause serious bodily injury, or result in death.*
- *Check hitch fit-up frequently. An improper fit-up can result in the Snow Pusher detaching from the tractor or skid steer and cause serious injury or death.*

CAUTION

To prevent serious injury:

- *Never use Snow Pusher to cut into soil, rock, or other compacted surfaces. Use unit for pushing only snow and other loose materials straight ahead.*
- *Never use Snow Pusher to push, pull, lift, tow, or carry fence posts, stumps, and/or other objects.*
- *Doing any of the above could damage the Snow Pusher and/or cause serious bodily injury.*
- *Make sure all safety labels are in their proper location and in good condition before operation. Follow all directions on the safety labels.*
- *Avoid hitting solid objects with the Snow Pusher. Hitting solid objects can damage the Snow Pusher and tractor/skid steer. Also, hitting solid objects can throw the operator forward causing injury.*

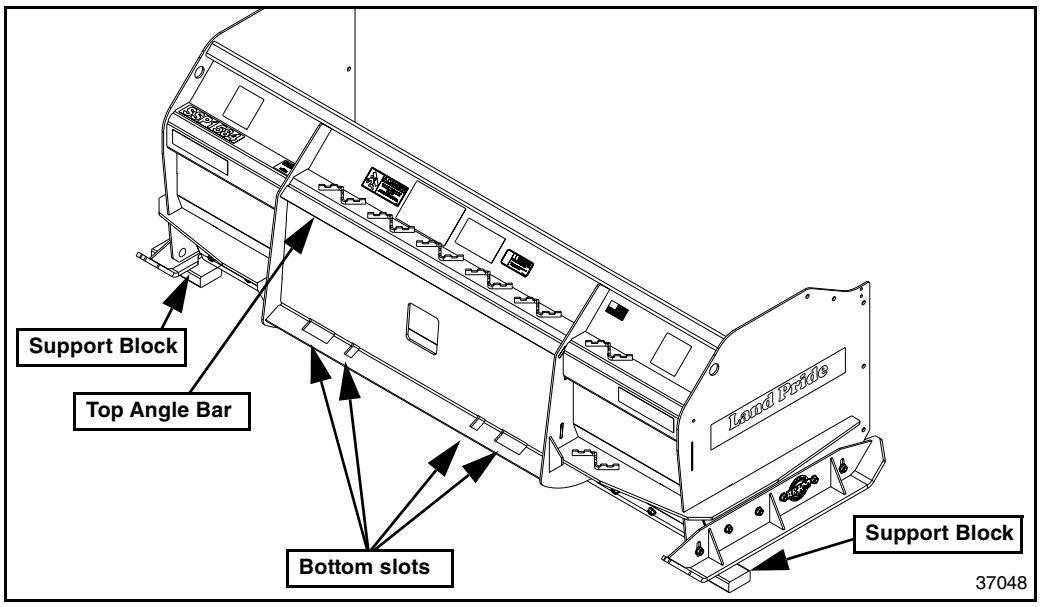

Hook-Up to Universal Quick Attach Hitch
Figure 2-1

Machine Shutdown Procedures

Always shut down tractor/skid steer before dismounting.

Skid Steer

a. Park on a level surface, engage park brake, lower attachment to the ground, turn off engine, and remove key to prevent unauthorized starting.

b. If included, raise seat bar and move controls until both are locked.

c. Use steps, grab-handles and skid-resistant surfaces when stepping on and off the skid steer.

Tractor

a. Park on a level surface, put tractor in park or set park brake, lower attachment to ground, turn off engine, and remove key to prevent unauthorized starting.

b. Use steps, grab-handles, and skid-resistant surfaces when getting on and off the tractor.

Hooking-Up The Snow Pusher

Refer to Figure 2-1:

DANGER

To prevent serious injury or death:

A Crushing Hazard exists when hooking-up equipment. Do not allow anyone to stand between skid steer/tractor and Snow Pusher while hooking-up.

CAUTION

To prevent serious injury:

Make sure skid steer/tractor hitch is properly attached to the Snow Pusher hitch. It must be secured under the Snow Pusher's top angle bars and locking handles must be locked down with locking pins extending fully through the bottom slots in the Snow Pusher hitch. An improperly attached Snow Pusher can come loose & fall.

The Snow Pusher is designed to attach to skid steer loaders and tractor loaders equipped with a universal quick attach hitch.

1. Check for and remove any debris in the hitch point areas before hooking-up to the Snow Pusher.
2. If needed, pull locking handles up on universal quick attach hitch until locking pins are fully raised.
3. Rotate top of loader tilt arms slightly forward.
4. Carefully and slowly approach the Snow Pusher centered on its hitch plate. Make sure the loader universal quick attach hitch is parallel with the top angle bar on the Snow Pusher.
5. Place top of universal quick attach hitch under the Snow Pusher's top angled bar.
6. Slowly lift universal quick attach hitch up until quick attach hitch and top angle bar have come together. Do not raise loader arms higher.
7. Rotate top of universal quick attach hitch back to align bottom slots in the Snow Pusher hitch plate with locking pins on the universal quick attach hitch.
8. Shut down tractor or skid steer properly before dismounting to complete hook-up. Refer to **"Machine Shutdown Procedures"** on this page.
9. Push lock handles on the universal quick attach hitch down until locking pins fully extend through bottom slots in the Snow Pusher hitch plate. Make sure locking handles are locked into position to keep pins from backing out.

Unhooking The Snow Pusher

WARNING

To prevent serious injury or death:

The Snow Pusher is back heavy and can tip over backwards easily once unhooked. Always un-hook unit on level ground with support blocks under the skid shoes at the back to tip the unit forward. Never unhook unit with back of unit facing downhill.

Refer to Figure 2-1 on page 12:

1. Park tractor/skid steer and Snow Pusher on a flat, level, solid surface.
2. Lower Snow Pusher down until skid shoes are resting on support blocks at the back of the unit and on the ground at the front of the unit to make the unit tip forward.
3. Shut down tractor/skid steer properly before dismounting to pull lock handles. Refer to **"Machine Shutdown Procedures"** on page 12.
4. Pull lock handles up to remove pins from bottom slots in hitch plate.
5. Return to the tractor or skid steer seat. Start machine and tilt top of universal quick attach hitch slightly forward toward the Snow Pusher.
6. Slowly lower universal quick attach hitch until hitch and Snow Pusher's top angle bar have separated.
7. Back tractor or skid steer slowly away from the Snow Pusher while making sure the universal quick attach hitch does not interfere with the Snow Pusher.
8. Shut tractor/skid steer down to check overturn stability of the unhooked Snow Pusher. Refer to **"Machine Shutdown Procedures"** on page 12. Make sure the unit will not tip over backwards easily. If needed, add bracing to keep unit from overturning.

Transporting

WARNING

To prevent serious injury or death:

When traveling on public roads, use accessory lights, SMV sign, clean reflectors, and other adequate devices to warn operators in other vehicles of your presence. Always comply with all federal, state, and local laws.

1. Select a safe ground travel speed when transporting from one area to another.
2. Transport with Snow Pusher low to the ground to maintain stability of the tractor/skid steer.
3. Reduce tractor/skid steer ground speed when turning; and leave enough clearance so the Snow Pusher does not contact obstacles such as buildings, trees, or fences.
4. Keep away from electrical power lines. Place an orange warning sign under overhead power lines indicating type of danger above.
5. When traveling on roadways, transport in such a way that faster moving vehicles may pass you safely.
6. When traveling over rough or hilly terrain, shift tractor/skid steer to a lower gear.

General Operating Instructions

Once you have familiarized yourself with the Operator's Manual, completed the operating checklist, and properly attached your Land Pride Snow Pusher to your tractor/skid steer, you are about ready to begin work. The Snow Pusher is ideal for pushing snow off of parking lots or any other areas you want cleared of snow. They also can be used to help clear soft materials from areas such as feed lots, grain floors, etc.

Hopefully, you have checked out your work site for any obstructions that you do not want to damage or encounter. Remove or flag obstructions before beginning your work. Also, check skid shoe adjustment to make sure they are carrying the blade at grade level or above small surface obstructions such as raised concrete surfaces at joint lines and other uneven surfaces.

Operating Tip: Operate Snow Pusher with skid shoes making full contact with the ground from front to back. Don't apply a lot of down pressure on the skid shoes. If available, operate with float on.

The Snow Pusher's primary purpose is to move snow or other soft material and pile it up. This function is best done at an approximate 2 to 4 MPH ground speed. Simply lower the Snow Pusher until it is resting on the skid shoes and proceed forward. The blade should immediately begin collecting snow or other soft materials between the side panels and clearing an area in front of you. You can transfer this material by pushing it forward to a nearby location and then raising the Snow Pusher to deposit your load. As the discharge pile builds, you will want to tilt the top to the hitch back to push the product up and onto the pile.

If using the pull back option, extend the hitch tilt cylinders until the bottom edge of the pull back frame is parallel with the paved surface. Lower the Snow Pusher down to carry the pull back blade slightly above the snow. Slowly approach the snow close to a wall or garage door making sure you stop before getting too close. Lower the pull back down until its blade and frame are resting on the paved surface. Making sure no one is behind you, start backing up to pull snow away. Keep backing up until you have pulled the snow far enough to remove the pile by pushing the pile forward with the Snow Pusher.

Achieving the desired effect will require a little experimentation and experience for your given condition. With a little practice, you should become a very good operator consistently achieving the desired results you expect with your Land Pride Snow Pusher.

See **"Specifications & Capacities"** on page 18 and **"Features & Benefits"** on page 19 for additional information and performance enhancing options.

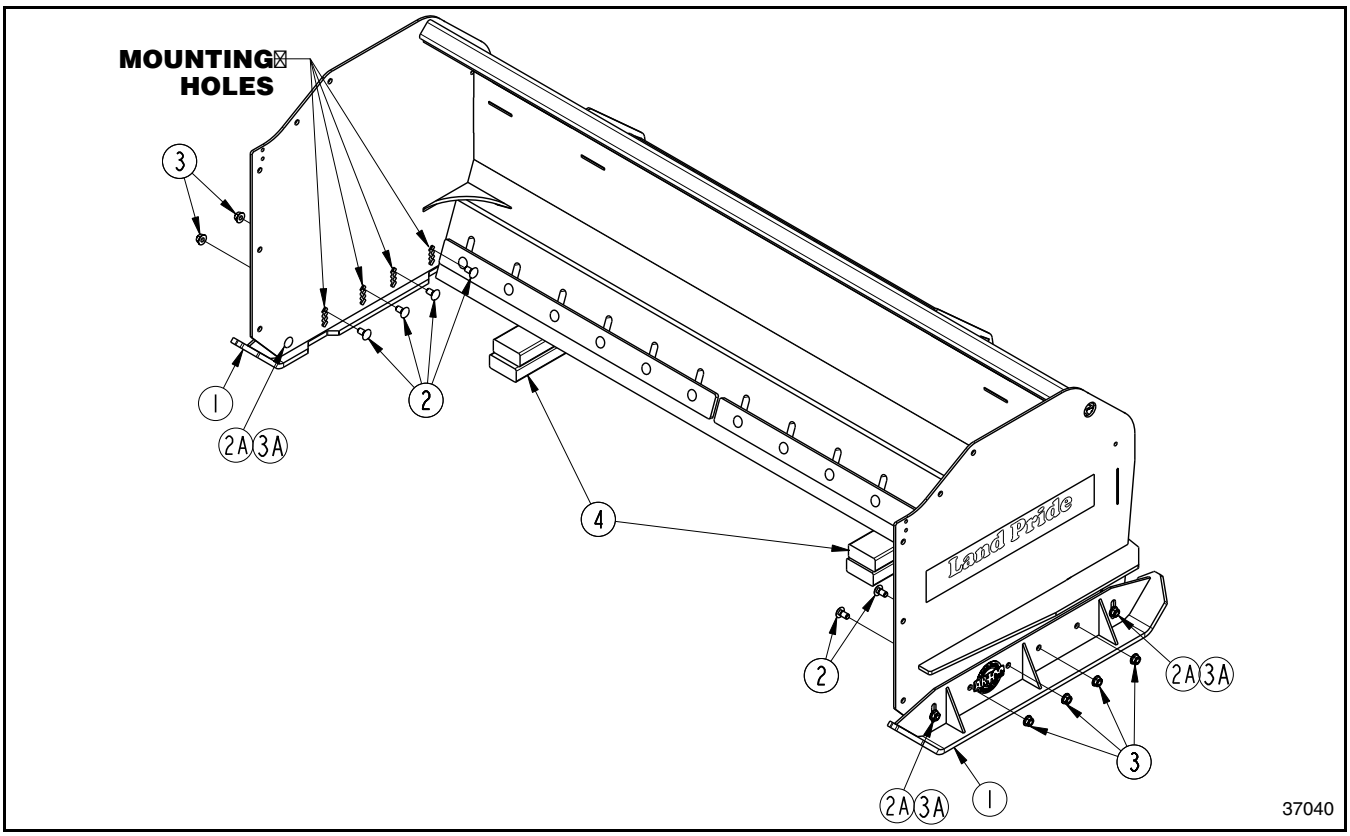

Skid Shoe Adjustments (SSP15 Series Shown)
Figure 3-1

Skid Shoe Adjustment

Refer to Figure 3-2 on page 15:

The Snow Pusher should be operated with skid shoes and blades set at the same height or with skid shoes set to carry the blade(s) off the ground.

Setting skid shoes and blade(s) at the same height is good for clearing snow and other loose materials close to the ground or paved surfaces. Adjusting skid shoes lower than the blades will carry the blade(s) above the ground which is good for pushing snow over gravel, concrete surfaces with uneven joints, and other uneven surfaces.

IMPORTANT: Do not unhook Snow Pusher from the loader arms to make adjustments. Unhooking can allow the unit to tip over while making adjustments.

NOTE: Mounting holes for adjusting the skid shoes are spaced vertically 1/2" apart.

Refer to Figure 3-1:

1. Park tractor/skid steer with Snow Pusher attached on level ground.
2. Lower Snow Pusher down until blade(s) are resting 4" to 6" off the ground on support blocks (#4).
3. Shut down tractor/skid steer properly before dismounting to adjust skid shoes. Refer to **"Machine Shutdown Procedures"** on page 12.
4. On the left-hand side, remove hex whiz nuts (#3) and carriage bolts (#2).
5. Loosen outside hex whiz nuts (#3A).

Refer to Figure 3-2 on page 15:

6. Set skid shoes and blades as follows:

   Skid Shoes & Blades Set at the Same Height:
   - **SSP15 Series:** Mount skid shoes (#1) in the second mounting holes down.
   - **SSP25 Series:** Mount skid shoes (#1) in the third mounting holes down.

   Skid Shoes Set Lower than the Blades:
   - **SSP15 Series:** Mount skid shoes (#1) in the third or fourth mounting holes down.
   - **SSP25 Series:** Mount skid shoes (#1) in the fourth mounting holes down.

Refer to Figure 3-1:

7. Reinsert 1/2"-13 x 1" GR5 carriage bolts (#2) and secure with whiz nuts (#3). Tighten whiz nuts to the correct torque.
8. Tighten whiz nuts (#3A) to the correct torque.
9. Repeat steps 4-8 for the right-hand side.

Blade Adjustments

DANGER

To prevent serious injury or death:

Make adjustments to the Snow Pusher after it has been properly attached to the tractor or skid steer and secured with solid supports. Never work around equipment supported by hydraulics. Hydraulics can drop equipment instantly if controls are actuated or if hydraulic lines burst even when power to hydraulics is shut off.

Preparation to Adjust Blades

IMPORTANT: Do not unhook Snow Pusher from the loader arms to make adjustments. Unhooking can allow the unit to tip over while making adjustments.

1. Park tractor/skid steer and Snow Pusher on level ground. Lower Snow Pusher until skid shoes are resting on 4" to 6" high support blocks to hold the snow blade off the ground.
2. Shut down tractor/skid steer properly before dismounting to adjust blade(s). Refer to **"Machine Shutdown Procedures"** on page 12.
3. Verify skid shoes are mounted in the 2nd hole down for the SSP15 Series and 3rd hole down for the SSP25 Series. If not, readjust skid shoes. Refer to **"Skid Shoe Adjustment"** on page 14 for detailed instructions.

New Rubber Snow Blade Adjustment

Refer to Figure 3-2:

The new rubber snow blade (#4) should be adjusted down until the leading edge is even with bottom of skid shoes.

1. Complete **"Preparation to Adjust Blades"** above.
2. Loosen all hex whiz nuts (#3) and raise snow blade (#4) until leading edge of snow blade is even with bottom of skid shoe.
3. Tighten hex whiz nuts (#3).
4. Back drag unit 50 yards on dry concrete to level trailing edge of snow blade with bottom of skid shoe.

Worn Rubber Snow Blade Adjustment

Refer to Figure 3-2:

A worn snow blade (#4) can be adjusted down until the leading edge is even with bottom of skid shoes.

1. Complete **"Preparation to Adjust Blades"** above.
2. Loosen all hex whiz nuts (#3) and adjust snow blade (#4) down until leading edge of snow blade is even with bottom edge of skid shoe.
3. Tighten hex whiz nuts (#3).

Reverse Rubber Snow Blade

Refer to Figure 3-2:

The snow blade (#5) can be reversed (rotated upside down) and reused to extend its life. Replace rubber snow blade when both edges can no longer be adjusted down.

1. Complete **"Preparation to Adjust Blades"** on this page.
2. Remove hex whiz nuts (#3), carriage bolts (#2), blade support bars (#1), and snow blade (#4).
3. Rotate snow blade upside down and reattach with existing hardware. Do not tighten nuts at this time.
4. Raise snow blade (#4) until leading edge of snow blade is even with bottom of skid shoes. Tighten hex whiz nuts (#3).
5. Back drag unit 50 yards on dry concrete to level trailing edge of snow blade with bottom of skid shoe.

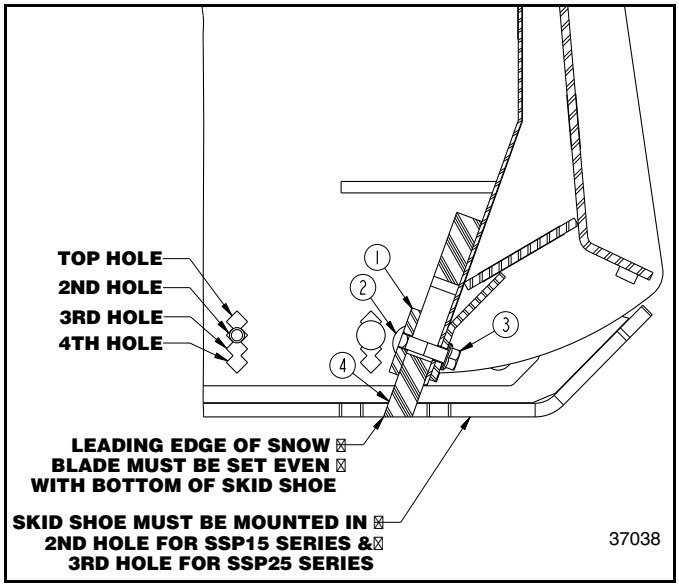

Rubber Snow Blade Adjustment & Reversing
Figure 3-2

Reverse Steel Blades

Refer to Figure 3-3:

The steel blades can be reversed (rotated upside down) to extend their life. Replace steel blades when both edges are worn excessively.

IMPORTANT: Be careful of sharp edges while reversing the steel blades.

1. Remove hex whiz nuts (#3), plow bolts (#2), and steel blades (#1).
2. Rotate steel blades upside down and reattach with existing 1/2"-13 x 1 1/2" GR5 plow bolts (#2), steel blades (#1), and hex whiz nuts (#3).
3. Tighten hex whiz nuts (#3) to the correct torque.

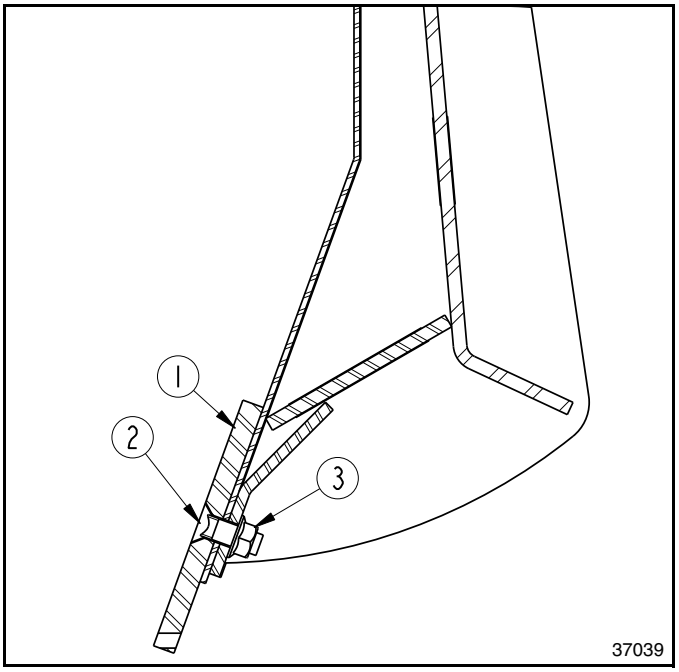

Reverse Steel Blades
Figure 3-3

Adjust Pull Back Rubber Blade

Refer to Figure 3-4:

The new pull back rubber blade should be adjusted to be even with bottom edge of pull back frame (#1).

1. Complete **"Preparation to Adjust Blades"** on page 15.
2. Loosen all hex whiz nuts (#3) and adjust rubber blade (#4) until rubber blade is even with bottom edge of pull back frame (#1) up to 1/4" beyond the edge.
3. Tighten hex whiz nuts (#3).

Reverse Pull Back Rubber Blade

Refer to Figure 3-4:

The pull back rubber blade can be reversed (rotated upside down) to extend its life. Replace rubber blade when both edges can no longer be adjusted to be even with bottom edge of pull back frame (#1).

1. Remove hex whiz nuts (#3), carriage bolts (#2), and rubber blade (#4).
2. Rotate rubber blades upside down and reattach with existing 1/2"-13 x 1 1/2" GR5 carriage bolts (#2), rubber blade (#4), and hex whiz nuts (#3).
3. Tighten hex whiz nuts (#3) to the correct torque.

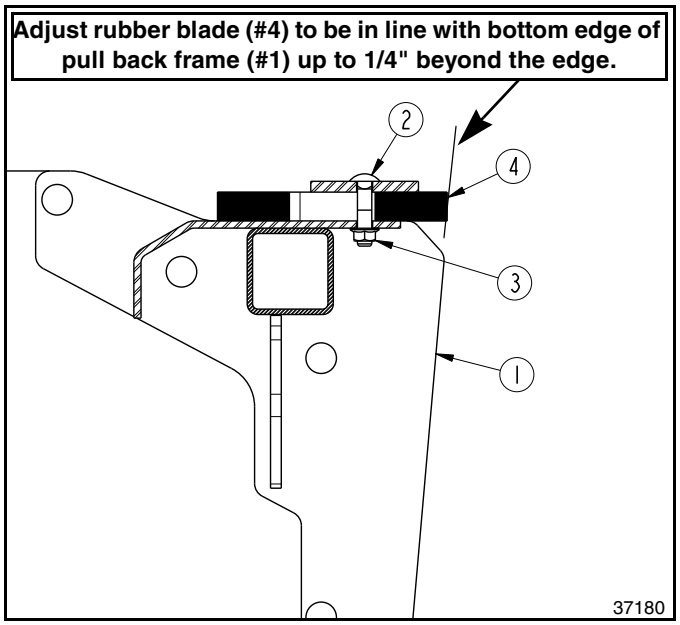

Pull Back Rubber Blade Adjustment & Reversing
Figure 3-4

Maintenance

DANGER

To prevent serious injury or death:

- *Do not work underneath raised lift arms unless an approved lift-arm support is available and is used to secure the lift arms in the raised position.*
- *Always secure equipment with solid supports before working under it. Never work under equipment supported by concrete blocks or hydraulics. Concrete blocks can break, hydraulic lines can burst, and/or hydraulic controls can be actuated even when power to hydraulics is off.*

WARNING

To prevent serious injury or death:

- *Perform schedule maintenance. Check for loose hardware, missing parts, broken parts, structural cracks, and high wear. Make repairs before putting the implement back into service. Serious breakdowns can result in injury or death.*
- *Do not alter implement or replace parts on the implement with other brands. Other brands may not fit properly or meet OEM specifications. They can weaken the integrity and impair the safety, function, performance, and life of the implement. Replace parts only with genuine Land Pride parts.*

Proper servicing and adjustment is the key to the long life of any implement. With careful inspection and routine maintenance, you can avoid costly downtime and repair.

Check all bolts after using the unit for several hours to be sure they are tight. Replace any worn, damaged, or illegible safety labels by obtaining new labels from your nearest Land Pride dealer.

The parts on your Snow Pusher have been specially designed and should only be replaced with genuine Land Pride parts. Do not alter the Snow Pusher in a way which will adversely affect its performance.

Skid Shoes

Refer to Figure 3-1 on page 14:

Skid shoes are reversible to extend their life. The shoes are 1/2" thick when new and should be reversed when approximately 5/16" thick. Replace skid shoes before the shoes are worn through.

IMPORTANT: Do not unhook Snow Pusher from the loader arms to make adjustments. Unhooking it can allow the unit to tip over while making adjustments.

1. Park tractor/skid steer and Snow Pusher on level ground.
2. Lower Snow Pusher until snow blade or alternate steel blades are resting on 4" to 6" high support blocks (#4) to hold the skid shoes off the ground.
3. Shut down tractor/skid steer properly before dismounting to adjust skid shoes. Refer to **"Machine Shutdown Procedures"** on page 12.
4. On the left-hand side, remove hex whiz nuts (#3 & #3A), carriage bolts (#2 & #2A), and skid shoe (#1).
5. Repeat step 4 for the right-hand side.
6. **Reverse Skid Shoes:** Attach left-hand skid shoe on the right-hand side and right-hand skid shoe on the left-hand side with existing 1/2"-13 x 1" GR5 carriage bolts (#2 & #2A) and hex whiz nuts (#3 & #3A). Tighten hex whiz nuts to the correct torque.
7. **Replace Skid Shoes:** Attach new skid shoes to the left and right-hand sides with existing 1/2"-13 x 1" GR5 carriage bolts (#2 & #2A) and hex whiz nuts (#3 & #3A). Tighten hex whiz nuts to the correct torque.

Blades

The optional rubber snow blades, steel blades, and pull back rubber blades can be rotated upside down and reused to extend their life. Replace blade(s) when both edges can no longer be adjusted down. For detailed instructions, see **"Reverse Rubber Snow Blade"** on page 15, **"Reverse Steel Blades"** on page 16, and **"Reverse Pull Back Rubber Blade"** on page 16.

Storage

Clean, inspect, service, and make necessary repairs to the Snow Pusher when parking it for long periods and when parking it at the end of a working season. This will help ensure that the Snow Pusher is ready for field use next time you hook-up to it.

1. Clean off any dirt that may have accumulated on the Snow Pusher. Scrape off compacted dirt and then wash surfaces thoroughly with a garden hose.
2. Inspect Snow Pusher for loose, damaged, or worn parts. Adjust and tighten loose parts. When needed, replace parts with genuine Land Parts only.
3. Repaint parts where paint is worn or scratched to prevent rust. Ask your dealer for Land Pride aerosol touch-up paint. They are also available in touch-up bottles with brush, quarts, and gallon sizes by adding TU, QT, or GL to the end of the aerosol part number.

Land Pride Aerosol Touch-up Paint

1Part No.	Part Description
1821-002C	PAINT LP BLACK AEROSOL SPRAY CAN

4. A light coating of oil or grease may be applied to the lower wear areas in lieu of paint to minimize oxidation.
5. Replace all damaged or missing decals.
6. Store Snow Pusher on a level surface in a clean, dry place. Inside storage will reduce maintenance and make for a longer Snow Pusher life.

SSP 15 & SSP25 Series

List	Specifications & Capacities					
Model Numbers	**SSP1572**	**SSP1584**	**SSP1596**	**SSP2596**	**SSP2510**	**SSP2512**
Working width	72"	84"	96"	96"	10' - 0"	12' - 0"
Capacity (Approximate)	33.5 ft^3	39 ft^3	44.5 ft^3	64 ft^3	80 ft^3	96 ft^3
Weight with rubber Blade	521 lbs.	562 lbs.	603 lbs.	844 lbs.	954 lbs.	1064 lbs.
Horsepower range	30-60 HP			50-80 HP		
Lift capacity of carrier	2,000 lbs. Maximum			5,000 lbs. Maximum		
Operating weight of carrier	5,000 lbs. Maximum			8,000 lbs. Maximum		
Hitch type	Universal Quick Attach Hitch			Universal Quick Attach Hitch		
Non-slip steps	Serrated steps mounted on hitch			Serrated steps mounted on hitch		
Skid Shoes	AR400 1/2" x 4" Reversible & replaceable			AR400 1/2" x 4" Reversible & replaceable		
Moldboard thickness	10 Ga.			3/16"		
Side panel thickness	1/4"			5/16"		
Snow blades (Optional)	1" x 8" Rubber with adjusting slots Reversible and replaceable blade			1 1/2" x 8" Rubber with adjusting slots Reversible and replaceable blade		
Steel blades (Optional)	1/2" x 6" Reversible and replaceable blades			1/2" x 6" Reversible and replaceable blades		
Pull Back (Optional)	1" x 8" Rubber blade with adjusting slots Blade is reversible and replaceable			1 1/2" x 8" Rubber blade with adjusting slots. Blade is reversible & replaceable		Not Available
Orange marker (Accessory)	28" Tall, bolts to the side panels			28" Tall, bolts to the side panels		

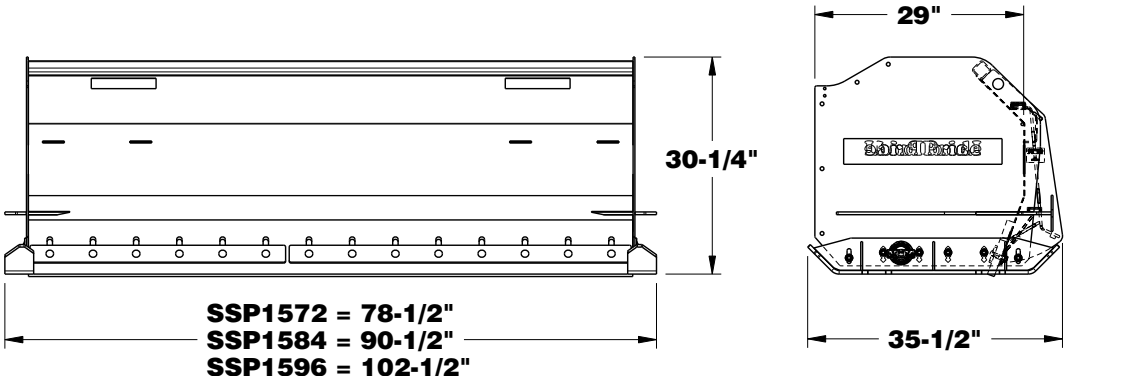

37041

SSP15 Series Snow Pushers

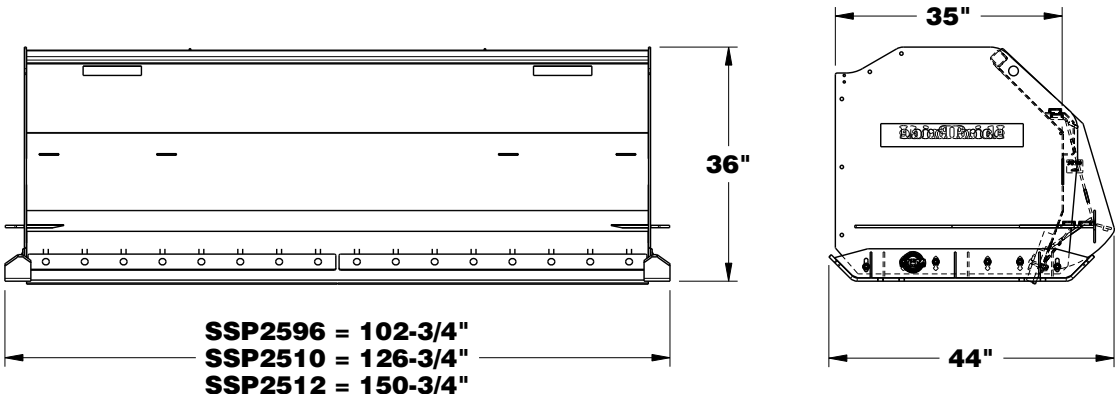

37061

SSP25 Series Snow Pushers

SSP15 & SSP25 Series

Features	Benefits
Universal quick attach hitch	Quick and easy to hook-up. Fits skid steers and tractor loaders with a universal quick attach hitch.
Hitch frame is angled forward	Allows operator to rotate front of Snow Pusher higher for pushing snow up a snow pile. Can build higher snow piles with this design.
1/4" & 5/16" Heavy side panels	Built heavy to handle the tough jobs.
Low profile exterior bracing on side panels and back	Reduces snow build-up on the moldboard and side panels. Reinforces side panels and back for a stronger unit.
1/4" Backing bar at blade mount	Makes for a strong moldboard.
Skid shoes are constructed of AR400 steel	Gives a greater wear life.
Z shaped steps	Allows snow to fall out of steps and helps prevent ice to build up.
Two year warranty	Built to last.
Reversible skid shoes	Skid shoes wear faster at the leading edge. Skid shoes that can be reversed will last longer than nonreversible skid shoes.
Replaceable skid shoes	Protects the side panels from wear.
Adjustable rubber snow blade	The blade can be adjusted down as it wears to extend its life.
Reversible rubber and steel blades	The blades can be reversed to extend their life.
Pull back with rubber blade	Used to pull snow away from garage doors.

Torque Values Chart for Common Bolt Sizes

Bolt Size (inches)	Bolt Head Identification Grade 2		Grade 5		Grade 8	
in-tpi [1]	N · m [2]	ft-lb [3]	N · m	ft-lb	N · m	ft-lb
1/4" - 20	7.4	5.6	11	8	16	12
1/4" - 28	8.5	6	13	10	18	14
5/16" - 18	15	11	24	17	33	25
5/16" - 24	17	13	26	19	37	27
3/8" - 16	27	20	42	31	59	44
3/8" - 24	31	22	47	35	67	49
7/16" - 14	43	32	67	49	95	70
7/16" - 20	49	36	75	55	105	78
1/2" - 13	66	49	105	76	145	105
1/2" - 20	75	55	115	85	165	120
9/16" - 12	95	70	150	110	210	155
9/16" - 18	105	79	165	120	235	170
5/8" - 11	130	97	205	150	285	210
5/8" - 18	150	110	230	170	325	240
3/4" - 10	235	170	360	265	510	375
3/4" - 16	260	190	405	295	570	420
7/8" - 9	225	165	585	430	820	605
7/8" - 14	250	185	640	475	905	670
1" - 8	340	250	875	645	1230	910
1" - 12	370	275	955	705	1350	995
1-1/8" - 7	480	355	1080	795	1750	1290
1-1/8" - 12	540	395	1210	890	1960	1440
1-1/4" - 7	680	500	1520	1120	2460	1820
1-1/4" - 12	750	555	1680	1240	2730	2010
1-3/8" - 6	890	655	1990	1470	3230	2380
1-3/8" - 12	1010	745	2270	1670	3680	2710
1-1/2" - 6	1180	870	2640	1950	4290	3160
1-1/2" - 12	1330	980	2970	2190	4820	3560

Bolt Size (Metric)	Bolt Head Identification 5.8 Class 5.8		8.8 Class 8.8		10.9 Class 10.9	
mm x pitch [4]	N · m	ft-lb	N · m	ft-lb	N · m	ft-lb
M 5 X 0.8	4	3	6	5	9	7
M 6 X 1	7	5	11	8	15	11
M 8 X 1.25	17	12	26	19	36	27
M 8 X 1	18	13	28	21	39	29
M10 X 1.5	33	24	52	39	72	53
M10 X 0.75	39	29	61	45	85	62
M12 X 1.75	58	42	91	67	125	93
M12 X 1.5	60	44	95	70	130	97
M12 X 1	90	66	105	77	145	105
M14 X 2	92	68	145	105	200	150
M14 X 1.5	99	73	155	115	l215	160
M16 X 2	145	105	225	165	315	230
M16 X 1.5	155	115	240	180	335	245
M18 X 2.5	195	145	310	230	405	300
M18 X 1.5	220	165	350	260	485	355
M20 X 2.5	280	205	440	325	610	450
M20 X 1.5	310	230	650	480	900	665
M24 X 3	480	355	760	560	1050	780
M24 X 2	525	390	830	610	1150	845
M30 X 3.5	960	705	1510	1120	2100	1550
M30 X 2	1060	785	1680	1240	2320	1710
M36 X 3.5	1730	1270	2650	1950	3660	2700
M36 X 2	1880	1380	2960	2190	4100	3220

[1] in-tpi = nominal thread diameter in inches-threads per inch

[2] N· m = newton-meters

[3] ft-lb= foot pounds

[4] mm x pitch = nominal thread diameter in millimeters x thread pitch

Torque tolerance + 0%, -15% of torquing values. Unless otherwise specified use torque values listed above.

Warranty

Land Pride warrants to the original purchaser that this Land Pride product will be free from defects in material and workmanship beginning on the date of purchase by the end user according to the following schedule when used as intended and under normal service and conditions for personal use.

Overall Unit: One year Parts and Labor

Blades and Skid Shoes: Considered wear items.

This Warranty is limited to the repair or replacement of any defective part by Land Pride and the installation by the dealer of any such replacement part, and does not cover common wear items such as blades, belts, tines, etc. Land Pride reserves the right to inspect any equipment or parts which are claimed to have been defective in material or workmanship.

This Warranty does not apply to any part or product which in Land Pride's judgment shall have been misused or damaged by accident or lack of normal maintenance or care, or which has been repaired or altered in a way which adversely affects its performance or reliability, or which has been used for a purpose for which the product is not designed. Misuse also specifically includes failure to properly maintain oil levels, grease points, and driveline shafts.

Claims under this Warranty must be made to the dealer which originally sold the product and all warranty adjustments must be made through such dealer. Land Pride reserves the right to make changes in materials or design of the product at any time without notice.

This Warranty shall not be interpreted to render Land Pride liable for damages of any kind, direct, consequential, or contingent to property. Furthermore, Land Pride shall not be liable for damages resulting from any cause beyond its reasonable control. This Warranty does not extend to loss of crops, any expense or loss for labor, supplies, rental machinery or for any other reason.

No other warranty of any kind whatsoever, express or implied, is made with respect to this sale; and all implied warranties of merchantability and fitness for a particular purpose which exceed the obligations set forth in this written warranty are hereby disclaimed and excluded from this sale.

This Warranty is not valid unless registered with Land Pride within 30 days from the date of purchase.

IMPORTANT: The Online Warranty Registration should be completed by the dealer at the time of purchase. This information is necessary to provide you with quality customer service.

Model Number _____ **Serial Number** _____



Corporate Office: P.O. Box 5060
Salina, Kansas 67402-5060 USA
www.landpride.com